V - SERIES

SCREW COMPRESSOR PACKAGES

MYCOM

MAYEKAWA

Bowman Refrigeration 206-706-3033

SPECIFICATIONS

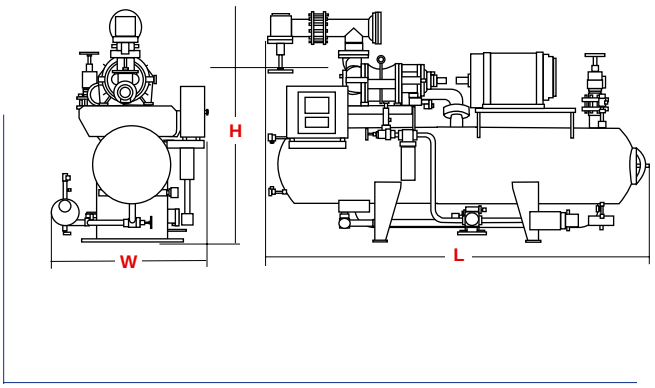

MODEL#	CFM Dsipl.	R-717 (See NOTE 1) Cap-TR	Power-BHP	DIMENSIONS L	H	W	WEIGHT
160 VSD	294	109	122	121	74	44	4300
160 VMD	367	136	147	122	74	44	4500
160 VLD	441	164	174	124	74	44	4800
200 VSD	574	216	236	141	83	52	6700
200 VMD	718	272	287	143	83	52	6900
200 VLD	859	328	340	151	90	57	8300
250 VSD	1120	426	446	159	98	59	10500
250 VMD	1400	538	551	184	107	65	14400
250 VLD	1670	643	658	190	107	65	15200
250 VLLD	1980	762	779	199	110	65	16200
320 VSD	2250	862	899	206	124	72	20200
320 VMD	2800	1075	1111	226	127	79	25600
320 VLD	3350	1291	1303	226	127	79	27300
400 SUD	4590	PLEASE CONSULT YOUR NEAREST MYCOM OFFICE.					
400 MUD	5700						
400 LUD	6890						
400 LLUD	8120						

Notes:

1. Rating basis: R-717, 3550 RPM, thermosiphon oil cooling, +20 F (-6.7 C) evaporating temprature, 95 F (35 C) condensing temperature, 10 F (5.5 C) liquid subcooling and 0 F suction superheat. 0 Psi pressure drop, without use of the economizer port.
2. Physical data based on oil separator, suction valve train and discharge valve train designed for operation at -50 F < Tevap < +20 F and 85 F < Tcond < 105 F
3. Each compressor is available with a shorter rotor (89%) to meet with smaller capacity and less breaker horse power. The model becomes a V*DS which will have a capacity of 89% of a standard compressor in the same frame size. *Consult factory with specific rating.
4. Consult factory for liquid injection ratings and dimensions
5. All information is subject to change until final unit design is completed for a given application and specs.

OPTIONS

REFRIGERANTS
- Halocarbon refrigerant applications

ECONOMIZER
- Shell and tube economizer including all controls.
- Economizer or Side Load control valve station with back pressure regulator.

OIL FILTERS
- Dual oil filters and pumps

OIL CHARGING
- Mycom synthetic lubricant MYCOLD AB-68.
- Oil charge valve with 20 mesh strainer.

OIL COOLER
- PHE oil cooler
- Stainless steel tubes in oil cooler
- Air cooled oil cooler
- Glycol oil cooling system

OIL SEPARATOR
- Vertical oil separator
- 350 Psig DWP oil separator
- Short length unit for trailer mounting

ARRANGEMENT
- Low temperature suction valve train (below -50°F)
- Dual screw compressor arrangement
- Remote control panel
- PLC control panel

SCREW COMPRESSOR PACKAGES
V-SERIES

V SERIES COMPRESSOR FEATURES

RANGE
Models from 160mm (249 CFM) to 400mm (8120 CFM)

HOUSING
Low porosity Cast Iron, ANSI/ASHRAE STD. 15, hydraulically tested at 470 Psig after assembly

BEARING
Radial bearings are steel backed babbitted sleeve type. Thrust bearings are angular contact ball bearings with oversized balanced piston.

ROTOR PROFILE
Mycom "O" profile reduces the rotor interlobe gas blow-by and improves sealing oil film on rotor surface by use of a circular arc profile rather than the conventional sealing edge.

VARIABLE Vi
The internal volume ratio (Vi) may be manually adjusted from 2.6 to 5.8 (2.2 to 5.0 as an option) to provide the lowest power consumption for any given application.

CAPACITY CONTROL
A hydraulically operated slide valve regulates the compressor capacity from 30% to 100% of full load with improved part load performance.

V SERIES UNIT FEATURES

LUBRICATION SYSTEM
Force feed lube system with a full time pump for bearing lubrication and capacity control actuation. Oil injection for cooling and sealing is accomplished without the use of the oil pump, except for low pressure differential conditions.

OIL SEPARATOR
Horizontal, three stage oil separation system with serviceable coalescing type elements in the final stage. Designed, fabricated and tested to ASME Sct. VIII for 300 Psig DWP. Each unit is supplied with ASME pressure relief valves rated per ANSI/ASHRAE 15.

OIL PUMP
Mycom double helical, direct drive, screw oil pump with integral pressure regulator for reliable, efficient and quiet operation.

OIL FILTRATION
The filter prior to the oil pump is a cleanable, 300 mesh, stainless steel strainer. The pumped oil filter protecting the compressor bearings is a 20 micron replaceable cartridge filter.

OIL COOLING
Three methods are available as standard: thermosiphon, water cooled and liquid injection. Other cooling methods are available as an option.

OIL TEMPERATURE CONTROL
Thermosiphon and water cooled units include a self actuated oil temperature control valve. Liquid injection units include an electric control valve actuated by the Mycom MYPRO CP-IV panel to control discharge temperature across the entire operating range.

SUCTION STRAINER
100 MESH, 3 layer design for protection against collapsing, self cleaning, cone type.

CONTROL PANEL
Mycom MYPRO CP-IV, NEMA 4, UL listed control panel with graphical color display, user friendly keypad and RS-485 communication port for use with MODBUS ASCII or RTU protocol.

ECONOMIZER
Factory mounted economizer with all controls or just the economizer control valve station are available options.

MAYEKAWA NORTH AMERICAN GROUP

MYCOM www.mycomus.com / www.mycomcanada.com

Torrance, CA Tel: (310) 328-1362 Fax: (310) 782-6759
Modesto, CA Tel: (209) 545-9752 Fax: (209) 545-3654
San Antonio, TX Tel: (210) 599-4536 Fax: (210) 599-4538
York, PA Tel: (717) 779-0138 Fax: (717) 779-0109
Montvale, NJ Tel: (201) 307-9199 Fax: (201) 307-1566
Seattle, WA Tel: (206) 284-9280 Fax: (206) 284-7230

(Canada)
Vancouver, BC Tel: (604) 270-1544 Fax: (604) 270-9870
Toronto, ON Tel: (905) 564-0664 Fax: (905) 564-7614

Bowman Refrigeration 206-706-3033