2200B0JE-DA-J-N_2009.10
First edition: 2009/10/01

MAYEKAWA

Screw Compressor
170J-Series Operation Manual
170JS-V/170JM-V/170JL-V

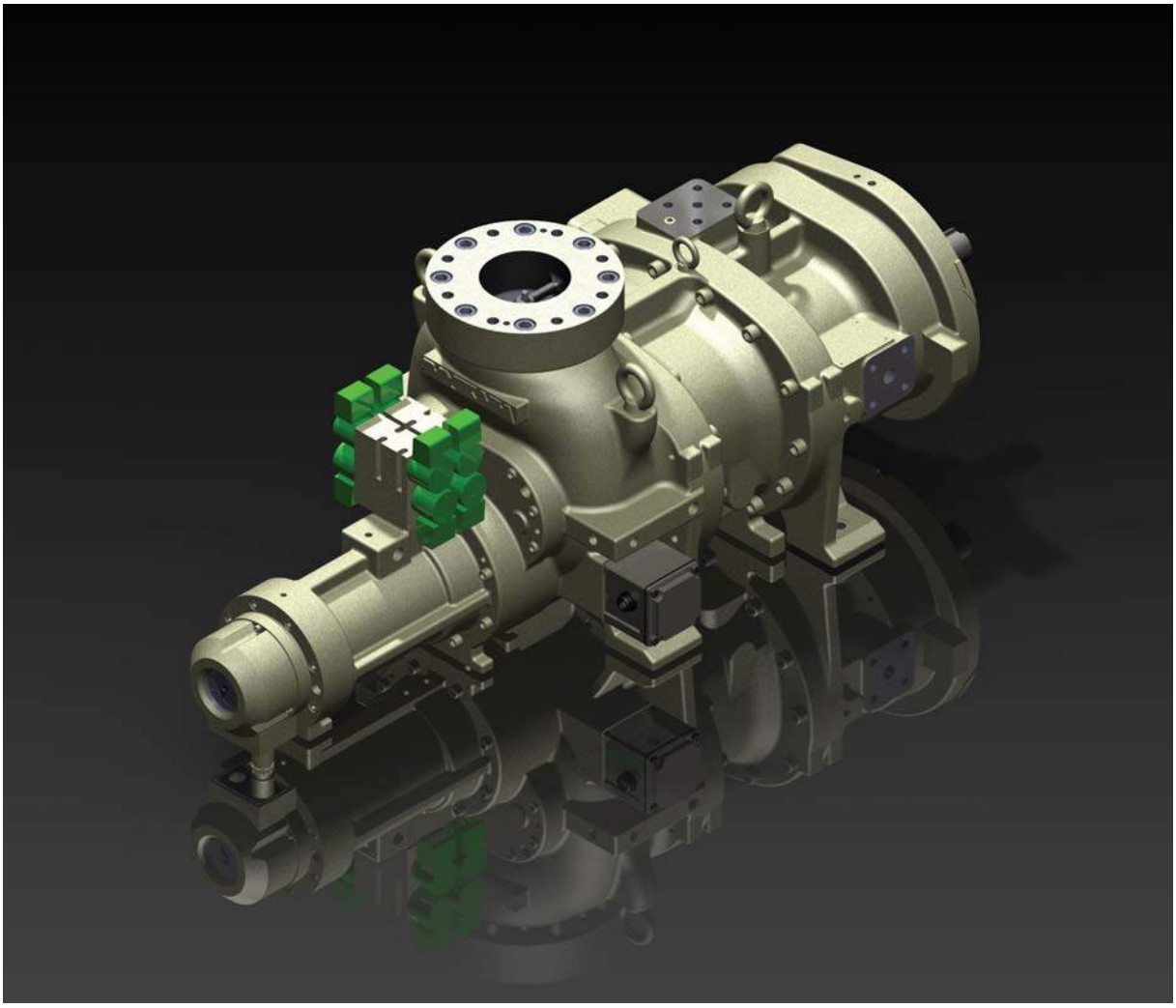

CAUTION

Before operating, maintaining, or inspecting this product, read the manual thoroughly and fully understand the contents.
Keep the operation manual in a safe, designated place for future reference whenever the need arises.
Specifications of this product are subject to change without prior notice.

Bowman Refrigeration 206-706-3033

MYCOM MAYEKAWA MFG. CO., LTD.

3–14–15 Botan Koto-ku, Tokyo 135-8482, Japan

Bowman Refrigeration 206-706-3033

Preface

Thank you for purchasing the 170J-series/screw compressor (hereinafter indicated as "this product").

This operation manual (hereinafter indicated as "this manual") describes safety information, operational and maintenance procedures in detail for safe and effective use of this product.

Before installing or using this product, make sure you read this manual.

Keep this manual in a safe place near the product for quick reference.

Bowman Refrigeration 206-706-3033

Warranty and Disclaimer

Warranty Clauses

If malfunctions or damages occur under proper usage (conditions) following documents such as operation manual or drawings of this product, or, if MAYEKAWA judges that malfunctions or damages are related to design or manufacture of the product, and if the malfunctions or damages are within the warranty period, we will repair or replace the product without any charges.

The warranty period is "12 months from factory shipment of this product".

MAYEKAWA is not liable for production or man made disaster compensation due to malfunction or damage of this product.

Disclaimer Clauses (Exclusion of Warranty Clauses)

Although MAYEKAWA warrants the clauses mentioned above, the following clauses are exempted.

- Malfunction or damage of this product caused by natural disaster, or other accidental forces (such as fire, thunderbolt, windstorm, intense rainfall, flood, tidal wave, earthquake, land subsidence, e.t.c).

- Malfunction or damage caused by misusage described below.
  - Malfunction, damage, or defect of this product due to abnormal or improper use (such as storing this product for middle to long term outside the building or in locations subject to high temperatures and high humidity, unexpected inspections, tests, operations, and excessive repetition start-up/stoppage of the product.)
  - Malfunction or damage caused by devices or equipments not provided by MAYEKAWA including operation control methods of those devices.
  - Malfunction or damage caused by refrigerants, gases, or refrigerant oils, and operating conditions (design conditions) not approved for this product.
  - Malfunction or damage caused by maintenance or inspection not recommended by MAYEKAWA.
  - Malfunction or damage caused by parts that are not Mayekawa genuine.
  - Malfunction or damage caused by remodeling the product without approval of MAYEKAWA.
  - Malfunction or damage caused by unexpected misusage

Bowman Refrigeration 206-706-3033

Important Information

Intended Use of the Product

This product is a universal screw compressor intended for refrigeration, cold storage, and air conditioning. Do not use the product for any other purposes that are not intended for or which depart from the specifications. For specifications of this product, refer to "2.2 Compressor Specifications".

When performing maintenance use qualified refrigeration personnel.

Important Information for Safe Use of the Product

Although MAYEKAWA has paid a lot of attention to safety measures for this product, all hazards including potential hazards caused by human errors, or due to environmental conditions can not be anticipated.

There are guidelines that must be observed for operating this product. However, the warnings in this manual and safety labels on the product are not all inclusive. When operating this product, pay extreme caution on personnel safety as well as on items described in this manual.

Important rules for safety work with the product that apply to all workers including managers and supervisors are listed below.

Before using this product, carefully read and fully understand the contents written in this manual and pay attention to safety.

- Operation, maintenance, and inspection of this product should be performed by qualified personnel educated about the fundamentals of the product and trained about hazards involved and measures to avoid danger.
- Do not allow any person other than those educated on the fundamental expertise of the product and trained about hazards involved and measures to avoid dangers to approach the product while it is operating or during maintenance.
- Observe all related federal/national and local codes and regulations.
- To prevent accidents, do not carry out any operation or maintenance other than those described in this manual, or use the product for any unapproved purpose.
- Replace the parts with the MAYEKAWA genuine parts.
- Not only workers but also managers should actively participate safety and health activities in the workplace to prevent accidents.

Observe the following precautions when performing maintenance work on electrical control.

- Electrical maintenance of the product must be performed by certified/qualified personnel and only those educated about the electrical control of the product.
- Before servicing or inspecting the electrical equipments or devices, turn "OFF" the motor main power and control power, and perform lockout/tagout to prevent the power from being turned on during work.

Even when the motor main power and control power are turned "OFF", the product may be turned on if the power is supplied from outside the refrigeration system, cold storage, and air conditioning unit. Make sure the power supply on the power source side is shut off, and perform lockout/tagout to prevent the product from being turned on during work.

Bowman Refrigeration 206-706-3033

About This Manual

- This product may be modified without prior notice. Therefore, the appearance of actual machine may differ from the descriptions in this manual. If you have any questions contact your sales offices or service centers.
- This manual is in English. If any other language is required it is the customers responsibility to prepare a manual for safety education and operation instructions.
- This manual is copyrighted. Drawings and technical references including this manual shall not, in whole or part, be copied, photocopied, or reproduced into any electronic medium or machine-readable form without prior permission from MAYEKAWA.
- Photographs or drawings included in this manual may differ from the appearance of actual product.
- If this manual is lost or damaged, immediately place a purchase order to your local sales office or service center for a new manual. Using the product without the manual may result in safety issues.
- If you resell the product, never fail to attach this manual to the product.

Construction of This Manual

Title of section and chapter	Description details
Preface	Describes the outline of this manual and how to read the manual.
Warranty and Disclaimer	Describes clauses and coverage of warranty. Exemption of warranty clauses is described as disclaimer.
Important Information	Describes important information related to the product and this manual.
1. Safety	Describes safety information for the worker, safety rules for this product, and management details regarding work safety required for handling the product.
2. Configuration and Specifications of the Compressor	Describes the main components of the product, functional information, specifications, and operating limits.
3. Installation	Describes installation procedure of the product.
4. Compressor and Package Operation	Describes precautions for operating the product.
5. Maintenance and Inspection	Describes sections and period for inspecting, disassembly and assembly of the product.
6. Troubleshooting	Describes troubleshooting methods for the product in case problems occur during operation of the product.
7. Related Document	Describes documents such as illustrated parts breakdown and parts list.
Appendix	Describes tips for design, manufacturing, and installation of the compressor package.

How to Order MAYEKAWA Genuine Parts

Confirm the applicable parts in "7.1 Development View and Configuration Table of the Parts" of "Chapter 7, Related Documents" and inform the product name, part code No., part name, and required quantity to our sales office or service center.

Bowman Refrigeration 206-706-3033

Inquiry

If you need further information or have any questions, please contact your local sales offices or service center.

1) Sales Offices in Japan

Description	Location	Telephone and facsimile No.
Head office	3-14-15, Botan, Koto-ku, Tokyo 135-8482, Japan	TEL: +81-3-3642-8181 FAX: +81-3-3643-7094
Moriya Factory	2000, Tatsuzawa, Moriya-shi, Ibaraki-pref., 302-0118	TEL: +81-297-48-1361 FAX: +81-297-48-5269
Hokkaido (Branch office)	2-5-1, Sanjyo, Nijyuyonken, Nishi-ku, Sapporo-shi, Hokkaido, 063-0803	TEL: +81-11-631-2052 FAX: +81-11-631-2053
Tohoku (Branch office)	2-5-12, Ideka, Miyagino-ku, Sendai-shi, Miyagi-pref., 983-0012	TEL: +81-22-259-5211 FAX: +81-22-259-5223
Hokushinetsu (Branch office)	Oyama-build. 303, 1-2-34, Bentenbashi-dori, Chuou-ku, Niigata-shi, Niigata-pref., 950-0925	TEL: +81-25-257-1626 FAX: +81-25-286-6165
Kanto (Branch office)	3-14-15, Botan, Koto-ku, Tokyo 135-8482, Japan	TEL: +81-3-3643-2886 FAX: +81-3-3641-8468
Tokai (Branch office)	1-15-36, Takamatsu, Suruga-ku, Shizuoka-shi, Shizuoka-pref., 422-8034	TEL: +81-54-236-5350 FAX: +81-54-236-5355
Chubu (Branch office)	2-9-6, Marunouchi, Naka-ku, Nagoya-shi, Aichi-pref., 460-0002	TEL: +81-52-218-3307 FAX: +81-52-218-3308
Kansai (Branch office)	1 4 27, Ebie, Fukushima ku, Osaka shi, Osaka, 553 0001	TEL: +81-6-4795-6000 FAX: +81-6-4795-6033
Chugoku (Branch office)	2-3-40, Takayadai, Higashi Hiroshima-shi, Hiroshima-pref., 739-2117	TEL: +81-82-491-1830 FAX: +81-82-491-1838
Shikoku (Branch office)	410-1, Otakamimachi, Takamatsu-shi, Kagawa-pref., 761-8074	TEL: +81-87-868-3400 FAX: +81-87-868-3399
Kyushu (Branch office)	Fukuoka-fujiland-build. 10F, 2-3, Nakajima-cho, Nakasu, Hakata-ku, Fukuoka-shi, Fukuoka-pref., 810-0802	TEL: +81-92-262-0016 FAX: +81-92-262-0115

2) Sales Offices in the world

Description	Location	Telephone and facsimile No.
NORTH AMERICA		
MYCOM CANADA LTD. (VANCOUVER OFFICE)	UNIT 110, 6620 MCMILLAN WAY, RICHMOND, B.C., V6W 1J7, CANADA	TEL: (1) 604-270-1544 FAX: (1) 604-270-9870
MYCOM CANADA LTD. (TORONTO OFFICE)	1745 BONHILL ROAD, UNIT #6&7 MISSISSAUGA, ONTARIO, L5T 1C1, CANADA	TEL: (1) 905-564-0664 FAX: (1) 905-564-7614
MAYEKAWA U.S.A. INC. (HEAD OFFICE)	8750 WEST BRYN MAWR AVENUE, SUITE 190 CHICAGO, IL 60631, U.S.A.	TEL: (1) 773-516-5070 FAX: (1) 773-516-5071
MAYEKAWA U.S.A. INC. INDUSTRIAL REFRIGERATION DIVISION (MIAMI OFFICE)	7220 N.W. 32TH AVE., SUITE 303, MIAMI, FL 33166, U.S.A.	TEL: (1) 305-477-5741 FAX: (1) 305-477-5681
MAYEKAWA U.S.A. INC. INDUSTRIAL REFRIGERATION DIVISION (CHARLOTTE OFFICE)	15905 BROOKWAY DRIVE UNIT 4208 HUNTERSVILLE, NC 28078, U.S.A.	TEL: (1) 704-896-3632 FAX: (1) 704-896-3697
MAYEKAWA U.S.A. INC. INDUSTRIAL REFRIGERATION DIVISION (NASHVILLE OFFICE)	SUITE 203 BROOKSIDE LANDING 1550 N MT JULIET RD., MT JULIET, TN 37122, U.S.A	TEL: (1) 615-773-2859 FAX: (1) 615-758-7743

Bowman Refrigeration 206-706-3033

Description	Location	Telephone and facsimile No.
MAYEKAWA U.S.A. INC. INDUSTRIAL REFRIGERATION DIVISION (LA OFFICE, FACTORY)	19475 GRAMERCY PLACE, TORRANCE, CA 90501, U.S.A.	TEL: (1) 310-328-1362 FAX: (1) 310-782-6759
MAYEKAWA U.S.A. INC. INDUSTRIAL REFRIGERATION DIVISION (SEATTLE OFFICE)	2615 W CASINO ROAD, UNIT-3D, EVERETT, WA 98204, U.S.A.	TEL: (1) 425-348-3404 FAX: (1) 425-348-3419
MAYEKAWA U.S.A. INC. INDUSTRIAL REFRIGERATION DIVISION (MODESTO OFFICE)	4718 GREEN LEAF COURT, SUITE 5 MODESTO, CA 95356, U.S.A.	TEL: (1) 209-545-9752 FAX: (1) 209-545-3654
MAYEKAWA U.S.A. INC. INDUSTRIAL REFRIGERATION DIVISION (SAN FRANCISCO OFFICE)	1840 GATEWAY DRIVE, # 226 SAN MATEO, CA 94404, U.S.A.	TEL: (1) 650-378-1235 FAX: —
MAYEKAWA U.S.A.INC. INDUSTRIAL REFRIGERATION DIVISION (SAN ANTONIO OFFICE)	16825 IH 35 NORTH SELMA, TX 78154, U.S.A.	TEL: (1) 210-599-4536 FAX: (1) 210-599-4538
MAYEKAWA U.S.A. INC. INDUSTRIAL REFRIGERATION DIVISION (NY OFFICE)	303 SOUTH BROADWAY, SUITE 102 TARRYTOWN, NEW YORK 10591, U.S.A.	TEL: (1) 914-301-9770 FAX: (1) 914-332-0400
MAYEKAWA U.S.A. INC. INDUSTRIAL REFRIGERATION DIVISION (YORK OFFICE)	3395 FARMTRAIL ROAD YORK, PA 17406, U.S.A.	TEL: (1) 717-779-0138 FAX: (1) 717-779-0109
MAYEKAWA U.S.A.INC. MANUFACTURING DIVISION (SAN ANTONIO OFFICE, FACTORY)	16825 IH 35 NORTH SELMA, TX 78154, U.S.A.	TEL: (1) 210-599-4518 FAX: (1) 210-599-1788
MAYEKAWA U.S.A. INC. CHEMICAL PROCESS DIVISION	19475 GRAMERCY PLACE, TORRANCE, CA 90501, U.S.A.	TEL: (1) 310-328-6279 FAX: (1) 310-328-8487
MAYEKAWA U.S.A. INC. CHEMICAL PROCESS DIVISION (HUSTON OFFICE)	3222 PASADENA FREEWAY PASADENA, TX 77503, U.S.A.	TEL: (1) 281-447-2599 FAX: (1) 281-447-6623
EUROPE		
N.V.MAYEKAWA EUROPE S.A. (HEAD OFFICE, FACTORY)	LEUVENSESTEENWEG 605, 1930 ZAVENTEM, BELGIUM	TEL: (32) 2-757-9075 FAX: (32) 2-757-9023
N.V.MAYEKAWA EUROPE S.A. ZWEGNIEDEALASSUNG DEUTSHLANSD	NUERNBERGER STRASSE 118, 97076 WUERZBURG, DEUTSCHLAND	TEL: (49) 931-389388-0 FAX: (49) 931-359388-20
MAYEKAWA UK REPRESENTATIVE OFFICE	16 OAKHURST GARDENS, BEXLEYHEATH, KENT DA7 5JP, UNITED KINGDOM	TEL: (44) 1322-433558 FAX: (44) 1322-433164
MAYEKAWA. S.L.	CALLE MONTEVIDEO 5, NAVE 13 POL. INDUSTRIAL CAMPORROSO 28806 ALCALA DE HENARES, MADRID, SPAIN	TEL: (34) 91-830-0392 FAX: (34) 91-830-0397
MAYEKAWA EUROPE S.A. SUCCURSALE FRANCAISE	9, RUE MICHAEL FARADAY, 78180 MONTIGNY-LE-BRETONNEUX, FARNCE	TEL: (33) 1-30-58-26-00 FAX: (33) 1-30-58-19-37
MAYEKAWA MFG. CO., LTD. MOSCOW LIAISON OFFICE	HOUSE 3, FLAT 54, MYTNAYA ST, MOSCOW, 119049 RUSSIA	TEL: (7) 499-230-01-76 FAX: (7) 495-230-21-12
MYCOM INTERTEC AG	ROSENBERGSTRASSE 31, CH-6300 ZUG, SWITZERLAND	TEL: (41) 41-726-8626 FAX: (41) 41-726-8620
MAYEKAWA EUROPE S,A, DUBAI OFFICE	P.O.BOX.61349, LOB.11.NO.126, JEBEL ALI FREE ZONE, DUBAI, U.A.E.	TEL: (971) 4-887-2232 FAX: (971) 4-887-2238
MAYEKAWA BULGARIA REPRENSETATIVE OFFICE	94, HRISTO BOTEV STR. 1202, SOFIA, BULGARIA	TEL: (359) 2-8319002 FAX: (359) 2-8319002
MYCOM REFRIGERATION INDIA PVT.LTD.	#30 CENTRUM PLAZA, GOLF COURESE ROAD, SECTOR 53, GURAGAON, HARYANA, 122002, REPBLIV OF INDIA	TEL: (91) 12-4420-6616 FAX: (91) 12-4420-6618
MAYEKAWA AUSTRALIA PTY.LTD.	UNIT 2, 44 MCCAULEY STREET MATRAVILLE NSW 2036, AUSTRALIA	TEL: (61) 2-9695-7000 FAX: (61) 2-9695-7001
MAYEKAWA AUSTRALIA PTY. LTD.(NEW ZEALAND BRANCH)	30 TUI STREET OTAHUHU PO. BOX 12106 AUCKLAND NEWZELAND	TEL: (64) 9-276-2305 FAX: (64) 9-276-2306

Bowman Refrigeration 206-706-3033

Description	Location	Telephone and facsimile No.
ASIA		
P.T.MYCOM INDONESIA	GRAHA PRATAMA BUILDING, 9TH FLOOR JI. M. T. HARYONO KAV.15 JAKARTA 12810, INDONESIA	TEL: (62) 21-8370-9484 FAX: (62) 21-8370-9483
MAYEKAWA (M) SDN. BHD.	35-1, BLOCK D1, DATARAN PRIMA, JALAN PJU 1/41, KELANA JAYA, 47301 PETALING JAYA, SELANGOR, MALAYSIA	TEL: (60) 3-78051406 FAX: (60) 3-78051409
MYCOM PHILIPPINES CORP.	UNIT 2706 UNION BANK PLAZA MERALCO AVENUE CORNER ONYX St. ORTIGAS CENTER, PASIG CITY 1605, PHILIPPINES	TEL: (63) 2-706-0473 FAX: (63) 2-706-0475
MYCOM PHILIPPINES CORP. (GENARAL SANTOS OFFICE)	ROOM 4, LEAH DAPROZA BUILDING FISCAL DAPROZA AVENUE GENERAL SANTOS CITY 9500	TEL: (63) 83-552-3282 FAX: (63) 83-301-2698
MAYEKAWA SINGAPORE PTE.LTD.	6 TAGORE LANE SINGAPORE 787470	TEL: (65) 6451-1565 FAX: (65) 6451-4932
MYCOM INDUSTRY CO., LTD. (HEAD OFFICE)	1F., NO.2, SHIN JANN ROAD, CHIEN CHEN DIST., KAOHSIUNG, TAIWAN 80672, REP.OF CHINA	TEL: (886) 7-821-0886 FAX: (886) 7-821-4688
MYCOM INDUSTRY CO., LTD. CHEMICAL DEPARTMENT	1F., NO.2, SHIN JANN ROAD, CHIEN CHEN DIST., KAOHSIUNG, TAIWAN 80672, REP.OF CHINA	TEL: (886) 7-821-7709 FAX: (886) 7-821-9019
MYCOM INDUSTRY CO., LTD. TAIPEI BRANCH	10F-4, NO, 421, SONG-SHAN ROAD, TAIPEI, TAIWAN 11083, REP. OF CHINA	TEL: (886) 2-2727-9711 FAX: (886) 2-2759-8484
MYCOM INDUSTRY CO., LTD. TAICHUNG BRANCH	NO. 19, SEC.3, HUANJUNG RD., TAICHUNG, TAIWAN, REP. OF CHINA	TEL: (886) 4-2251-4128 FAX: (886) 4-2251-4129
MAYEKAWA CHINA INDUSTRIES CO., LTD.	ROOM 705, WISE LOGIC INTERNATIONAL CENTER, NO.66 NORTH SHANXI RD., SHANGHAI, 200041, CHINA	TEL: (86) 21-5116-8958 FAX:(86) 21-5116-8928
MAYEKAWA CHINA INDUSTRIES CO., LTD. QINGDAO OFFICE	ROOM 503, FULIN BUILDING NO.87 SOUTH FUZHOU ROAD, SOUTH DISTRICT, QINGDAO CITY, 266071, CHINA	TEL: (86) 532-8602-6169 FAX: (86) 532-8602-6269
MAYEKAWA MFG. CO., LTD BEIJING LIAISON OFFICE	NO.7B222 HANWEI PLAZA, NO.7 GUANGHUA ROAD, CHAOYANG DISTRICT, BEIJING 100004, CHINA	TEL: (86) 10-6561-7811 FAX: (86) 10-6561-1997
MAYEKAWA (THAILAND) CO., LTD.	2/3 MOO 14, 9TH FLOOR BANGNA TOWER BLDG., TOWER A, BANGNA-TRAD RD, K.M.6.5, BANGKAEW BANGPLEE, SAMUTPRAKARN 10540, THAILAND	TEL: (66) 2-751-9610 FAX: (66) 2-751-9565
MAYEKAWA (THAILAND) CO., LTD. TRANG BRANCH	1/7 TRANG-PALIAN RD., MUANG, TRANG 92000, THALAND	TEL: (66) 75-224-784 FAX: (66) 75-224-351
MAYEKAWA HOLDING (THAILAND) CO., LTD.	2/3 MOO 14, 9TH FLOOR BANGNA TOWER BLDG., TOWER A, BANGNA-TRAD RD, K.M.6.5, BANGKAEW BANGPLEE, SAMUTPRAKARN 10540, THAILAND	TEL: (66) 2-751-9610 FAX: (66) 2-751-9565
MAYEKAWA MFG.CO., LTD. HO CHI MINH CITY REPRESENTATIVE OFFICE	ROOM 305, 3FL, TOUI TRE TOWER, 60A HOANG VAN THU, WARD 9, PHU NHUAN DIST., HO CHI MINH CITY, VIETNAM	TEL: (84) 8-3997-5284 FAX: (84) 8-3997-5287
MAYEKAWA VIETNAM ONE MEMBER COMPANY LIMITED (MAYEKAWA VIETNAM)	ROOM 305, 3FL, TOUI TRE TOWER, 60A HOANG VAN THU, WARD 9, PHU NHUAN DIST., HO CHI MINH CITY, VIETNAM	TEL: (84) 8-3997-5284 FAX: (84) 8-3997-5287

Bowman Refrigeration 206-706-3033

Description	Location	Telephone and facsimile No.
MYCOM KOREA CO., LTD. HEAD OFFICE	JUYEON BUILDING 2F, SEOGYE-DONG 209, YONGSAN-KU, SEOUL, 140-710, REP.OF KOREA	TEL: (82) 2-796-1766 FAX: (82) 2-798-7715
MYCOM KOREA CO., LTD. CHANGWON FACTORY	PALYONG DONG 24-20, CHANGWON KYUNGSANGNAM-DO 641847, REP.OF KOREA	TEL: (82) 55-294-8678 FAX: (82) 55-299-7678
MYCOM KOREA CO., LTD. PUSAN BRANCH	TONG YOUNG SU SAN 6F, 763-20 KAMCHEON-DONG, SAHA-KU, PUSAN 604-806, REP.OF KOREA	TEL: (82) 51-242-3737 FAX: (82) 51-243-8542
MYCOM KOREA CO., LTD. GWANGJU BRANCH	970-6 WOLCHUL-DONG PUK-KU GWANGJU 500-460, REP. OF KOREA	TEL: (82) 62-973-8471 FAX: (82) 62-973-8475
LATIN AMERICA		
MAYEKAWA ARGENTINA S.A. (BUENOS AIRES OFFICE)	AV. VELEZ SARSFIELD 670/74 C1282 AFT-CAPITAL FEDERAL BUENOS AIRES, REPUBLICA ARGENTINA	TEL: (54) 11-4302-2791 FAX: (54) 11-4304-3015
MAYEKAWA ARGENTINA S.A. (PUERTO MADRYN OFFICE)	OFICINA PTO. MADRYN LEOPOLDO LUGONES 45 (U9129KDA)-PUERTO MADRYN PCIA DE CHUBUT REPUBLICA ARGENTINA	TEL: (54) 2965-475414 FAX: (54) 2965-475414
MYCOM PERU S.A.C.	CALLE LUIS PASTEUR 1490, LINCE, LIMA, PERU	TEL: (51) 1-441-8552 FAX: (51) 1-222-1543
MAYEKAWA CHILE S.A.C.el. (SANTIAGO OFFICE)	CORDILLERA No.331, MODULO D14, FLEX CENTER, PUERTO VESPUCIO, QUILICURA, SANTIAGO, CHILE	TEL: (56) 2-739-0202 FAX: (56) 2-739-2700
MAYEKAWA CHILE S.A.C.el. (CONCEPCION OFFICE)	ANIBAL PINTO No.215, OFICINA 403, CONCEPCION, CHILE	TEL: (56) 41-223547 FAX: (56) 41-212443
MAYEKAWA CHILE S.A.C.el. (PUERTO MONTT OFFICE)	BERNARDINO 1057 MODULO 6, PARQUE INDUSTRIAL SAN ANDRES PUERTO MONTT, CHILE	TEL: (56) 65-257570 FAX: (56) 65-288073
ANREC LTDA	TRANSVERSAL 93 NO.53-48 INTERIOR 37, PAQUE INDUSTRIAL EL DORADO, BOGOTO, COLOMBIA	TEL: (57) 1-224-3028 FAX: (57) 1-224-3203
MAYEKAWA DO BRASIL REF. LTDA.	RUA LICATEM 250, JARDIM FAZENDA RINCAO POLO INDUSTRIAL DE ARUJA-SP, CEP 07400-000, BRASIL	TEL: (55) 11-4654-8000 FAX: (55) 11-4654-8002
MAYEKAWA DO BRASIL LTDA. (BAHIA BRANCH)	RUA DR. JOSE PEROBA, 275 - SALA 902 EDIFICIO METROPOLIS - BAIRRO STIEPE, SALVADOR-BA, CEP 41770-2325, BRASIL	TEL: (55) 71-3341-0737 FAX: —
MAYEKAWA DO BRASIL LTDA. (BELO HORIZONTE BRANCH)	AV. BARAO HOMEM DE MELLO, 4386 – S 401 ED.EMYR SOARES - BAIRRO ESTORIL BELO HORIZONTE-MG, CEP 30450-250, BRASIL	TEL: (55) 31-3297-6166 FAX: —
MAYEKAWA DO BRASIL LTDA. (CHAPECO BRANCH)	RUA FERNANDO MECHADO, 593 D-S 201 CHAPECO-SC CAIXA POSTAL 177, CEP 89801-973, BRASIL	TEL: (55) 49-3322-4241 FAX: (55) 49-3322-4241
MAYEKAWA DO BRASIL LTDA. (CUIABA BRANCH)	AVENIDA ISSAC POVOAS, 586 − SALA 405 EDIFICIO WALL STREET - CENTRO CUIABA-MT, CEP 78055-560, BRASIL	TEL: (55) 65-3023-7559 FAX: —
MAYEKAWA DO BRASIL LTDA. (CURITIBA BRANCH)	RUA ISABEL A. REDENTORA, 1826 – SALA 8 CENTRO - SAO JOSE DOS PINHAIS-PR, CEP 83095-980, BRASIL	TEL: (55) 41-3383-1518 FAX: —
MAYEKAWA DO BRASIL LTDA. (CAMPO GRANDE BRANCH)	RUA JOSE ANTONIO PEREIRA, 2200 – S 02 CONDOMINIO COSTA D'OURO CAMPO GRANDE-MS, CEP 79010-190, BRASIL	TEL: (55) 67-3042-7200 FAX: —
MAYEKAWA DO BRASIL LTDA. (GOIANIA BRANCH)	RUA C, 255 – QUADRA 588 – LOTE 4/8 SALA 1004 – CENTRO EMPRESARIAL SEBBA GOIANIA-GO, CEP 74280-010, BRASIL	TEL: (55) 62-3093-5062 FAX: —
MAYEKAWA DO BRASIL LTDA. (OESTE PAULISTA BRANCH)	AV. FRANCISCO DE CHAGAS OLIVEIRA, 344 JARDIM PINHEIRO SAO JOSE DO RIO PRETO-SP, CEP 15091-330, BRASIL	TEL: (55) 17-3227-0235 FAX: —
MAYEKAWA DO BRASIL LTDA. (RECIFE BRANCH)	RUA SA E SOUZA, 687 – SALA 103 SETUBAL RECIFE-PE, CEP 51030-065, BRASIL	TEL: (55) 81-3342-7670 FAX: -

Bowman Refrigeration 206-706-3033

Description	Location	Telephone and facsimile No.
MAYEKAWA DO BRASIL LTDA. (RIO GRANDE DO SUL BRANCH)	RUA MUCK, 298 – SALA 601 EDIFICIO SANTA HELENA CANOAS-RS, BRASIL	TEL: (55) 51-3429-1860 FAX: -
MAYEKAWA DO BRASIL LTDA. (MACAE)	RUA PROFESSOR MARIETA PEIXOTO, 62 CENTRO - MACAE – RJ, CEP 27910-250, BRASIL	TEL: (55) 22-2772-6069 FAX: (55) 22-2759-3112
MAYEKAWA DO BRASIL LTDA. (RIO DE JANEIRO BRANCH)	AV. DAS AMERICA, 8445 - LOJA 1309 BARRA DA TIJUCA, RIO DE JANEIRO-RJ, CEP 22793-081, BRASIL	TEL: (55) 21-2431-0266 FAX: (55) 21-2431-0266
MYCOM CENTROAMERICA S.A	BODEGA #63, CONDOMINIO COMERCIAL TIERRA DOS, EL CACIQUE DE RIO SEGUNDO, ALAJUELA, COSTA RICA	TEL: (506) 2441-4464 FAX: (506) 2441-4465
MYCOM VENEZUELA SALES & SERVICES,C.A. (CARACAS OFFICE)	CALLE LOS MANGOS, EDIFICIO SELEMAR, PISO 8, SABANA GRANDE, CARACAS, VENEZUELA	TEL: (58) 212-216-6026 FAX: (58) 212-216-0608
MYCOM VENEZUELA SALES & SERVICE, C.A. (MARACAY OFFICE)	AV.INTERCOMUNAL TURMERO, EDF.TECHOMAT METROPOLITANO, PISO 1, OFICINA 3, MARACAY, EDO.ARAGUA, VENEZUELA	TEL: (58) 243-269-4913 FAX: (58) 243-269-3952
MYCOM VENEZUELA SALES & SERVICE, C.A. (MARACAIBO OFFICE)	AV.17 SECTOR LOS HATICOS C.C. PARQUE INDUSTRIAL ANGELINI, LOCAL #14, PLANTA ALTA, MARACAIBO, EDO. ZULIA, VENEZUELA	TEL: (58) 261-764-8055 FAX: (58) 261-765-0853
MYCOM CHEMICAL PROCESS CORP. DE VENEZUELA S.A.	AV.17 SECTOR LOS HATICOS C.C. PARQUE INDUSTRIAL ANGELINI, LOCAL #14, PLANTA ALTA, MARACAIBO, EDO. ZULIA, VENEZUELA	TEL: (58) 261-765-1059 FAX: (58) 261-765-2176
MAYEKAWA DE MEXICO, S.A. DE C.V. (CUERNAVACA OFFICE)	AV.DE LOS 50MTS.NO.381, CIVAC. JIUTEPEC MORELOS, C.P.62578, MEXICO	TEL: (52) 77-73-19-0925 FAX: (52) 77-73-20-5762
MAYEKAWA DE MEXICO, S.A. DE C.V. (MEXICO CITY OFFICE)	AV.COYOACAN #945 COL .DEL VALLE DEL. BENITO JUAREZ C.P.03100, MEXICO, D.F. MEXICO	TEL: (52) 55-5062-0870 FAX: (52) 55-5062-0898
MAYEKAWA DE MEXICO, S.A. DE C.V. (GUADALAJARA OFFICE)	SANTA MARIA No.3086, COL. VALLARTA SAN LUCAS GUADALAJARA, JALISCO, C.P.44690, MEXICO	TEL: (52) 3336-15-5765 FAX: (52) 3336-15-1307
MAYEKAWA DE MEXICO, S.A. DE C.V. (MONTERREY OFFICE)	AV. HIDALGO 2258 LOCAL 8 COL. OBISPADO MONTERREY, N.L., C.P.64060, MEXICO	TEL: (52) 81-8347-3085 FAX: (52) 81-8347-5830
MAYEKAWA DE MEXICO, S.A. DE C.V. (OBREGON OFFICE)	CALLE SINALOA NO.611 (ENTRE NICOLAS BRAVO Y 6 DE ABRIL), COL. CENTRO, C.P.85000, CD. OBREGON, SON, MEXICO	TEL: (52) 644-415-4302 FAX: (52) 644-415-3500
MAYEKAWA DE MEXICO, S.A. DE C.V. (IRAPUATO OFFICE)	CALLE AGUSTIN ZARAGOZA NO.219 LOCAL-2 COL.DEPORTIVA, C.P.36612, IRAPUATO, GTO. MEXICO	TEL: (52) 462-624-9353 FAX: (52) 462-624-9264
MAYEKAWA DE MEXICO, S.A. DE C.V. (CULIACAN OFFICE)	AV. NICOLAS BRAVO 1572, LOCAL 1 COL.MORELOS CULIACAN, SINALOA, C.P.80170, MEXICO	TEL: (52) 66-7715-4199 FAX: (52) 66-7715-4150

s

Bowman Refrigeration 206-706-3033

Revision Description

Operation manual name	170J-Series Operation Manual	Document No.	2200B0JE-DA-J-N	First edition issue date	2009/10/01

Revision No.	Issuance Date	Contents of revisions (modified clause, page, and details)	Created/approved by:

Bowman Refrigeration 206-706-3033

Table of Contents

1 Safety

1.1 Observation/Prevention 1-1
1.1.1 Observance (Do's) 1-1
1.1.1.1 Do's on Operation 1-1
1.1.1.2 Do's on Maintenance 1-1
1.1.1.3 Do's on Lockout/Tagout after Shutting off the Power 1-1
1.1.1.4 Do's about Personal Protective Devices 1-2
1.1.1.5 Strict Do's about Handling of Hazardous and Toxic Substances 1-2
1.1.1.6 Strict Do's about Handling Emergency Situation 1-2
1.1.1.7 Strict Do's about Waste Oil, Fluid, and Materials 1-2
1.1.1.8 Other Strict Do's 1-2
1.1.2 Prohibition (Don'ts) 1-3

1.2 Warnings 1-4
1.2.1 Types and Meanings of Warnings 1-4
1.2.2 Safety labels 1-4

1.3 Remaining Hazard 1-6

1.4 Safety Devices 1-8
1.4.1 Emergency Stop Button 1-8
1.4.2 Breakers of Motor Main Power and Control Power (Use of Lockout/Tagout Devices) 1-8
1.4.3 Compressor Protection Devices 1-9

1.5 Example of Material Safety Data Sheet (MSDS) 1-11

2 Structure and Specifications of the Compressor

2.1 Features of the 170J-Series Screw Compressor 2-1

2.2 Compressor Specifications 2-2
2.2.1 Specifications 2-2
2.2.2 Outer Dimensions 2-3

2.3 Operation Limits 2-6

2.4 Structure of The Compressor 2-7
2.4.1 Sectional View 2-7

2.5 Mechanisms 2-9
2.5.1 Basics of The Screw Compressor 2-9
2.5.2 Suction Process 2-10
2.5.3 Compression Process 2-10
2.5.4 Discharge Process 2-10

2.6 Oil Flow 2-11

2.7 Capacity Control Characteristics 2-12

Bowman Refrigeration 206-706-3033

2.8 Variable Vi Control 2-13
2.8.1 Vi (Internal Volume Ratio) 2-13
2.8.2 Reasons for Adjusting Vi According to Operating Conditions 2-14
2.8.3 Details of Variable Vi Mechanism 2-15
2.8.3.1 Automatic Variable Vi Mode 2-15
2.8.3.2 Fixed Vi Mode 2-15
2.8.4 Vi Position Sensor 2-16
2.9 Solenoid Valve 2-17

3 Installation

3.1 Precautions for Installation 3-1
3.2 Installation Work 3-2
3.2.1 Unpacking 3-2
3.2.2 Storage 3-2
3.2.3 Transfer 3-2
3.2.4 Preparation for Installation 3-3
3.2.5 Installation 3-4
3.2.5.1 Installation 3-4
3.2.5.2 Piping 3-5
3.2.5.3 Optional Accessories 3-5
3.2.6 Compressor Protection Functions (Safety Device) 3-6
3.2.7 Pressure Test (Leak Test) 3-7
3.2.8 Refrigerant Oil Charge 3-7
3.2.8.1 Initial Charge of Refrigerant Oil 3-7
3.2.8.2 Additional Charge of Refrigerant Oil Procedure 3-8
3.2.9 Charging of Refrigerant 3-8
3.2.10 Check after Installation 3-8
3.3 Documents Related to Installation 3-9

4 Compressor and Package Operation

4.1 Adjustment before Test Operation 4-1
4.1.1 Adjustment of Unloader Slide Valve and Variable Vi Valve 4-1
4.2 Refrigerant Oil (Lubricant) 4-2
4.2.1 Precautions for Selecting the Refrigerant Oil 4-2
4.2.2 Recommended Refrigerant Oil 4-2
4.2.3 Change of Refrigerant Oil Brand 4-3
4.2.4 Precautions for Handling Refrigerant Oil 4-4
4.2.4.1 Precautions for Handling Polyalkylene Glycol (PN46) 4-4
4.2.4.2 Precautions for Handling Polyolester (POE) Oil 4-4
4.3 Precautions for Operation 4-5
4.3.1 Prevention of Liquid Return Operation 4-5
4.3.2 Purging of Non-condensable Gases 4-5
4.3.3 Action for Stopping the Compressor for Long Period of Time 4-6

Bowman Refrigeration 206-706-3033

5 Maintenance and Inspection

5.1 Precautions for Maintenance and Inspection 5-1

5.2 Maintenance List 5-2

5.2.1 Daily Management 5-2

5.2.2 Compressor Overhaul 5-6

5.3 Management of Refrigerant Oil 5-10

5.3.1 Refrigerant Oil Management Standard 5-10

5.3.2 Replacement Interval for Refrigerant Oil 5-11

5.4 Disassembly and Assembly of the Compressor 5-12

5.4.1 Preparation for Disassembly 5-12

5.4.2 Common Work Items 5-14

5.4.3 Vi Position Sensor 5-16

5.4.3.1 Precautions for Removal 5-17

5.4.3.2 Precautions for Installation 5-17

5.4.4 Seal Cover 5-18

5.4.4.1 Precautions for Removal 5-19

5.4.4.2 Precautions for Installation 5-19

5.4.5 Bearing Cover 5-21

5.4.5.1 Precautions for Removal 5-21

5.4.5.2 Precautions for Installation 5-23

5.4.6 Unloader Indicator/Capacity Control Solenoid Valve 5-24

5.4.6.1 Precautions for Removal 5-25

5.4.6.2 Precautions for Installation 5-25

5.4.7 Unloader Cover 5-26

5.4.7.1 Precautions for Removal 5-27

5.4.7.2 Precautions for Installation 5-28

5.4.8 Unloader Cylinder 5-30

5.4.8.1 Precautions for Removal 5-30

5.4.8.2 Precautions for Installation 5-31

5.4.9 Vi Cylinder 5-33

5.4.9.1 Precautions for Removal 5-33

5.4.9.2 Precautions for Installation 5-34

5.4.10 Balance Piston Cover 5-35

5.4.10.1 Precautions for Removal 5-35

5.4.10.2 Precautions for Installation 5-36

5.4.11 Suction Cover 5-37

5.4.11.1 Preparation for Suction Adapter Removal 5-37

5.4.11.2 Precautions for Removal 5-37

5.4.11.3 Precautions for Installation 5-38

5.4.12 Bearing Head 5-40

5.4.12.1 Precautions for Removal 5-40

5.4.12.2 Precautions for Installation 5-41

5.4.13 Separation of Suction Cover and Main Rotor Casing 5-43

5.4.13.1 Precautions for Removal 5-43

5.4.13.2 Precautions for Installation 5-44

Bowman Refrigeration 206-706-3033

5.4.14 Suction Cover 5-45
5.4.14.1 Precautions for Removal 5-45
5.4.14.2 Precautions for Installation 5-46
5.4.15 Rotor 5-47
5.4.15.1 Precautions for Removal 5-48
5.4.15.2 Precautions for Installation 5-48
5.4.16 Separation from Bearing Head 5-50
5.4.16.1 Precautions for Removal 5-50
5.4.16.2 Lifting of Bearing Head 5-50
5.4.16.3 Lifting of Main Rotor Casing 5-51
5.4.16.4 Precautions for Installation 5-51
5.4.17 Bearing Head 5-52
5.4.17.1 Precautions for Removal 5-52
5.4.17.2 Precautions for Installation 5-52
5.4.18 Suction Adapter 5-54
5.4.18.1 Precautions for Removal 5-54
5.4.18.2 Precautions for Installation 5-55
5.4.19 Unloder Slide Valve Guide 5-56
5.4.20 Adjustment of End Clearance 5-57
5.4.21 Inspection for Runout Male Rotor Shaft 5-59
5.4.22 Inspection for Runout of Seal Cover Mount Face (Bearing Cover) 5-60

6 Troubleshooting

6.1 Troubleshooting 6-1

7 Related Documents 7-1

7.1 Development View and Configuration Table of the Parts 7-1
7.2 List of Tightening Torques for Bolts and Nuts 7-7
7.3 List of Tools for Disassembly 7-9

Appendix 1 Tips for Design, Manufacturing, and Installation of the Compressor Package

Appendix 1.1 Precautions for Design of the Compressor Package 1-2
Appendix 1.2 Tips for Compressor Package Manufacturing 1-7
Appendix 1.3 Tips for Compressor Package Installation 1-8

Bowman Refrigeration 206-706-3033

1 Safety

1.1 Observation/Prevention

1.1.1 Observance (Do's)

1.1.1.1 Do's on Operation

- Always use the specified controller (CP4) designed for this product.
- This controller protects the compressor utilizing sensor output values.
- Make sure that all necessary safety devices are installed and the control values for machine protection are set correctly.
- Regularly inspect the safety devices and the controller's protective functions. Ensure that they operate properly.
- If the safety devices and the controller's protective functions do not work properly or the machine operates abnormally, stop operation immediately and report the incident to your supervisor. Do not restart the machine until the supervisor determines the machine safety and provides proper instructions for restart.
- If the machine stops due to unknown reasons, immediately inform your supervisor. Do not restart the machine until the supervisor determines the machine safety and provides the proper instructions for restart.
- Some types of refrigerants generate bad smell or toxic gases and cause oxygen deficiency. Make sure to ventilate the working area.
- Some refrigerants and refrigerant oils may be corrosive, decomposable, or toxic. Make sure to obtain the Material Safety Data Sheets (MSDS) of the refrigerants and refrigerant oils and follow their instructions.
- When stopping the compressor for a long time, turn "OFF" the main motor, heater, and control power. Close the suction and discharge side shut-off valves.

1.1.1.2 Do's on Maintenance

- When performing work with at least two or more persons, thoroughly confirm the work procedure and clearly understand each others work before commencement.
- Always turn OFF and lockout /tagout the main motor, control and other devices before troubleshooting, setup, cleaning, maintenance, or inspection of the compressor. Also, make sure that those powers are NOT turned on accidentally during work.
- Always confirm that the pressure inside the package (refrigerating/cold storage/ air conditioning) is atmospheric before troubleshooting, setup, cleaning, maintenance or inspection of the compressor.
- Before troubleshooting, setup, cleaning, servicing or inspection of the compressor, apply lockout/tagout or other equivalent measures to the liquid supply stop valves and valves in the upstream and downstream of any opening so that the valves do not open accidentally during the work.
- Some types of refrigerants generate bad smell or toxic gases and cause oxygen deficiency. Make sure to ventilate the air during work.
- Some refrigerants and refrigerant oils may be corrosive, decomposable, or toxic. Make sure to obtain the Material Safety Data Sheets (MSDS) of the refrigerants and refrigerant oils and follow their instructions.
- After working on the machine, always store the tools used at the specified places and make sure that no tools are left in or around the machine.

1.1.1.3 Do's on Lockout/Tagout after Shutting off the Power

- Prepare lockout/tagout devices for the main breakers of the main motor and control power.
- By applying lockout/tagout after shutting off the power, you can prevent any other personnel from activating the machine (power) inadvertently and protect safety of the personnel working inside the power supply equipment and the package.

Bowman Refrigeration 206-706-3033

- If there are any possibilities of danger during work (especially during cleaning, maintenance, inspection, or troubleshooting), turn "OFF" the main motor and control power, and perform lockout/tagout.
- Before entering the package for troubleshooting, setup, cleaning, or maintenance/inspection, always apply lockout/tagout to the main motor and control power personally.
- Shut off the power and perform lockout/tagout before entering the package. Clearly notify the workers of the necessity of lockout/tagout.
  - It is assumed that workers do not perform lockout/tagout of the main motor and control power before starting work because it is troublesome, and only turn "OFF" the main motor and control power.
  - It is assumed that workers only turn off main motor and control power and do not lockout/tagout the main motor and control power, because they think it is not important.
- After checking that all the work is finished, the worker who applied lockout/tagout must release them.

1.1.1.4 Do's about Personal Protective Devices

- Prepare and use protective devices that comply with the area's safety standards.
- Check the function of each protective device before use.
- Wear work clothing, and tighten wristbands.
- Do not wear any neckties or jewelry that can get entangled in the moving or rotating parts. A helmet is recommended to protect your head and hair.
- Do not have anything in your pocket to prevent objects from falling into the machine.

1.1.1.5 Strict Do's about Handling of Hazardous and Toxic Substances

- Obtain Material Safety Data Sheets (MSDS) from manufacturers of hazardous and toxic substances.
- Check the MSDS and follow the handling instructions recommended by the manufacturers to handle and store those substances.

【POINT】

- An example of Material Safety Data Sheet (MSDS) is provided as a reference at the end of this chapter.

1.1.1.6 Strict Do's about Handling Emergency Situation

- Develop an emergency action procedure in accordance with the legal regulations and post it at a safe place.

1.1.1.7 Strict Do's about Waste Oil, Fluid, and Materials

- Disposal of refrigerant and waste oil from the compressor are subject to a number of regulations for environmental protection purposes. Follow the local, state or federal acts and regulations as well as your company's rules, when disposing of such waste oil, fluid and materials.

1.1.1.8 Other Strict Do's

- Keep the floor around the refrigerating, cold storage, and air conditioning packages clean and provide a safety aisle.
- Use only the safety aisle to move around the equipment. Keep the safety aisle free from any tools and cleaning fluid.
- If water or oil is spilled on the compressor or the floor, immediately wipe it off to prevent workers from injury caused by slipping.

Bowman Refrigeration 206-706-3033

1.1.2 Prohibition (Don'ts)

- Do not remove or relocate any safety device, including electrical interfaces.
- Do not disable any safety device by short-circuiting or bypassing without any permission.
- Do not leave the compressor unsafe and unattended, by removing the safety cover or some other safety measures.
- Do not touch, clean, or lubricate any part of the compressor especially moving parts when the compressor is operating.
- Do not touch relays or electric systems such as terminal block with bare hands when turning on the power.

Bowman Refrigeration 206-706-3033

1.2 Warnings

To alert workers about possible dangers, the following two measures are always provided with the compressor.

- Warnings described in this manual
- Safety labels affixed on the compressor

1.2.1 Types and Meanings of Warnings

This manual includes the following four types of warnings to be used for hazards during operation or maintenance of the compressor.

Neglecting such warnings may cause accidents, resulting in personal injury or even death. Also, the compressor or its auxiliary equipment may be heavily damaged. Therefore, be sure to always observe the instructions of the warnings.

DANGER	Indicates an imminently hazardous situation which, if not avoided, will result in serious injury or death.
WARNING	Indicates a potential hazardous situation which, if not avoided, could result in serious injury or death.
CAUTION	Indicates a potential hazardous situation which, if not avoided, may result in minor or moderate injury.
CAUTION	Indicates a potentially hazardous situation which, if not avoided, may result in property damage.
【POINT】	Emphasizes important items or profitable information.

1.2.2 Safety labels

The following shows the types of safety labels and their positions affixed on the compressor. Always follow the warnings instructed on the safety label affixed on the compressor.

WARNING

- **Be sure to follow the instructions of the safety labels. Otherwise, danger resulting in personal injury, death, or property damage may arise.**
- **Do not smear, cover, or peel off the safety labels.**
- **If the safety labels are damaged or missing, purchase and affix new labels to their proper positions according to this manual.**

【POINT】

- Inform our service center of the product name and safety label number when placing a purchase order for safety labels.

Bowman Refrigeration 206-706-3033

■ Types of Safety Labels

Table 1-1 Safety Label

No.	Safety label	Remarks
1	Caution! This seal cover is equipped with "o" ring for airtightness. Make sure to remove the "o"ring before initial start up. Moreover, seal drain piping has been plugged with a vinyl cap. Please remove the cap at the time of initial start up.	
2	CAUTION NITROGEN GAS IS SEALED IN THIS COMPRESSOR	

■ Affixing Positions of Safety Labels

The figure below shows the affixing positions of safety labels.
The numbers in the figure correspond to the ones in Table1-1 Safety Label.

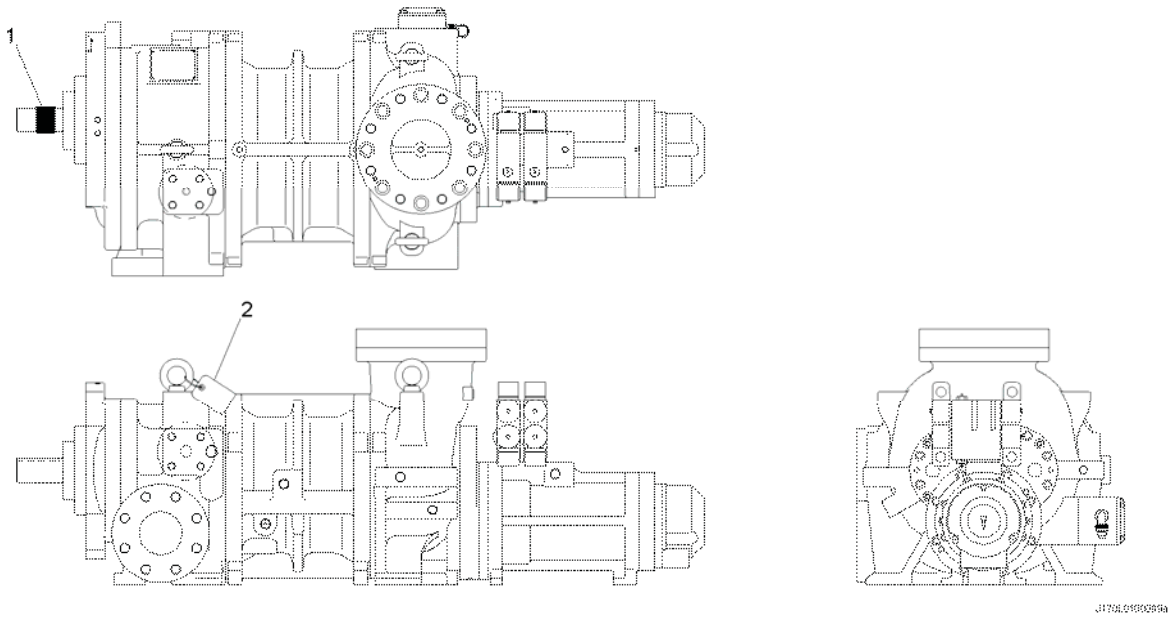

Fig. 1-1 Safety Label Locations

Bowman Refrigeration 206-706-3033

1.3 Remaining Hazard

The following information is provided on the assumption that the compressor is operated, inspected, and maintained while being used in general refrigerating, cold storage, and air conditioning packages. Note that all hazardous sources cannot be predicted for the applications mentioned.

Devise appropriate countermeasures for hazardous sources in your systems.

Table 1-2 Hazardous Sources

DANGER SOURCE		Predicted hazard	Measures to be taken in operation	Measures to be taken when cleaning, inspecting, and parts exchange
A	Coupling	- Entanglement	• Installation of guard • Wearing protective devices	• Lockout/tagout of main motor and control power
B	Motor terminals	- Electric shock - Burn	• Installation of guard • Wearing protective devices	• Lockout/tagout of main motor and control power
C	Suction side casing	- Frostbite	• Installation of guard • Wearing protective devices	• Wearing protective devices • Working with normal temperature
D	Discharge side casing	- Burn	• Installation of guard • Wearing protective devices	• Wearing protective devices • Working below temperature of 40 °C
E	Discharge piping	- Burn	• Installation of guard • Wearing protective devices	• Wearing protective devices • Working temperature below 40 °C
F	Lubrication piping and fitting	- Contact with or inhalation of hazardous substances - Burn	• Installation of guard • Wearing protective devices • Appropriate ventilation	• Wearing protective devices • Working temperature below 40 °C • Appropriate refrigerant handling • Appropriate ventilation
G	Heater (oil separator)	- Electric shock - Burn	• Installation of guard • Wearing protective devices	• Lockout/tagout of heater main power and control power • Wearing protective devices • Working temperature below 40 °C
H	Gas purge valve	- Contact with or inhalation of hazardous substances	• Wearing protective devices • Appropriate ventilation	• Wearing protective devices • Appropriate ventilation
I	Oil drain	- Contact with or inhalation of hazardous substances - Frostbite, burn	• Wearing protective devices • Appropriate ventilation	• Wearing protective devices • Working with normal temperature
J	Noise and vibration	- Noise nuisance (deafness)	• Wearing protective devices	—

Bowman Refrigeration 206-706-3033

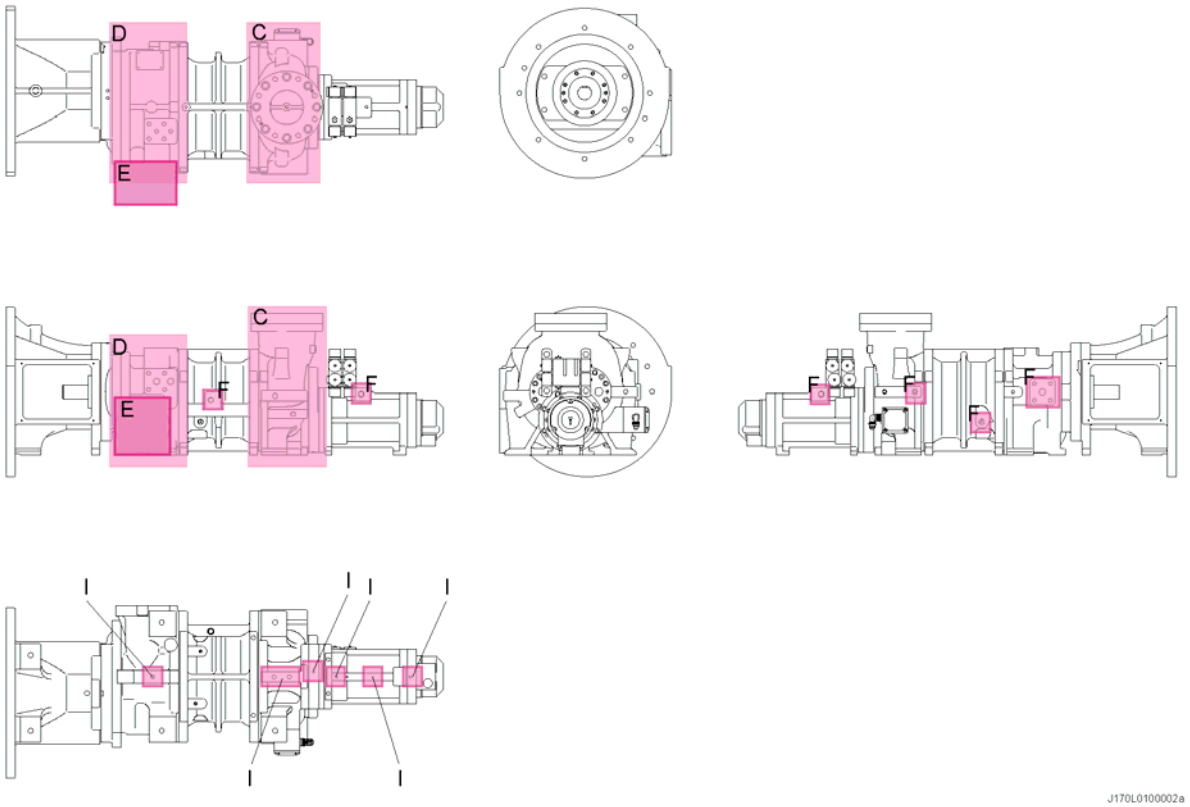

Fig. 1-2 Hazardous Sources

Bowman Refrigeration 206-706-3033

1.4 Safety Devices

For safe use and protection of the compressor, make sure to attach safety devices to the compressor that comply with the regulations and the following descriptions.

Safety devices must be properly and periodically maintained and inspected. It is important to include maintenance and inspection of safety devices in the periodical maintenance/inspection schedule. Make sure to provide users of the compressor with necessary information on types, attachment positions, functions, inspection method of the safety devices.

WARNING

- **Check the safety devices after turning on the power and before operation of the compressor. If they do not operate normally, immediately take measures to replace them.**

1.4.1 Emergency Stop Button

■ Overview/Function/Purpose

Used to stop to the compressor immediately if an emergency occurs to the compressor or package.

■ Installation Positions

The emergency stop button is installed on the CP4 controller and in the operation or control room.

■ Stop/Restart Methods

To activate and reset the emergency stop button, refer to the CP4 controller operation manual.

■ Inspection Method/Cycle

The emergency stop button must be tested before starting or operating the compressor and must also be periodically tested. For inspection procedure and inspection cycle of the emergency stop buttons, refer to the CP4 controller operation manual.

1.4.2 Breakers of Motor Main Power and Control Power (Use of Lockout/Tagout Devices)

■ Overview/Function/Purpose

Lockout/tagout devices must be installed on the breakers of the main motor and control power to prevent injury of workers in case the machine (compressor) is inadvertently turned on by the other workers.

This should be done prior to any type of work being performed on the compressor or package.

■ Installation Positions

Breakers for the main motor and control power

■ Methods of Performing and Releasing Lockout/Tagout

In accordance with the regulations created by Occupational Safety & Health Administration (OSHA) and other authorities, make sure to clearly indicate methods of performing and releasing lockout/tagout and provide users of this compressor with the necessary information.

■ Inspection Method/Cycle

For inspection procedure and inspection cycle of lockout/tagout devices, refer to the operation manual of those devices.

Bowman Refrigeration 206-706-3033

1.4.3 Compressor Protection Devices

■ Overview/Function/Purpose

To protect the compressor, the following safety functions of the CP4 controller are used.

■ Protection from High discharge temperature

This function stops the compressor when the discharge temperature exceeds the set value.

A temperature sensor is installed in the oil separator.

■ Protection from High oil temperature

This function stops the compressor when the oil temperature exceeds the set value.

A temperature sensor is installed in the package lubrication piping after the oil cooler.

■ Protection from abnormally High pressure

This function stops the compressor when the discharge pressure abnormally rises due to compressor misoperations or stoppage of cooling water supply to the condenser.

This function prevents explosion of the equipment and components.

A pressure sensor is installed in the oil separator.

■ Protection from abnormally Low suction pressure

This function stops the compressor when the suction pressure is below the set value.

A pressure sensor is installed in the suction piping.

■ Protection from abnormal oil pressure

This function stops the compressor when oil supply is not sufficient, the oil filter is clogged, too much refrigerant in oil, or oil supply pressure difference (from suction pressure) is below the set value. This is to protect the compressor from wear and seizure.

A pressure sensor is installed after the oil filter.

■ Protection from oil filter Differential pressure

This function stops the compressor when the differential pressure between discharge and lubrication pressure is below the set value due to clogging of filters or other reasons.

The discharge and the oil pressure sensors are used.

■ Protection from Low oil level

This function constantly detects the oil level in the oil separator and stops the compressor when the oil level is below the lower limit.

Oil level sensor is installed in the oil separator.

■ Protection from motor overcurrent

This function controls the unloader of compressor when current exceeds the set value (upper limit). In some cases, it stops the compressor.

The current value is monitored by the CP4 controller.

■ Sensor positions and settings

Refer to the package operation manual for the positions and settings of sensors for compressor protection.

Make sure that the set values of the sensors do not exceed the operating limits indicated in Table 2-2.

Bowman Refrigeration 206-706-3033

■ Inspection Method/Cycle

Compressor protection sensors require operation tests and checking the set values before starting or operating the compressor and must be periodically inspected. For inspection methods and periods, refer to the package operation manual.

⚠ WARNING

- **Adjust the set values and check operation of the compressor protection functions of the controller and the sensors of the package during test running.**

⚠ CAUTION

- **To test the operation of each sensor used for compressor protection, use devices such as pressure tester to check that alarms and switches operate normally. Do not operate the compressor with all the valves closed, or in any other dangerous conditions.**
- **If oil pressure, abnormal high pressure or, oil filter differential pressure protection functions operate, eliminate the cause before re-starting the compressor.**

Bowman Refrigeration 206-706-3033

1.5 Example of Material Safety Data Sheet (MSDS)

Material Safety Data Sheet for Chemical Substances

(NOTE: This material is an extract from the guidance regarding the indication on hazardousness/harmfulness of chemical substances for occupational safety and health (general rules).)

Prepared by (or name of corporation)

Address
Department/Section in charge : Staff in charge :
Phone number :
Fax number :
Phone No. in emergency :

Prepared/revised: (Date)

Name of chemical substance

Specification of substance
- Distinction of single substance or mixture
- Chemical name
- Component and content
- Chemical formula or structural formula
- Official gazette notice file No. (OSHA, Chemical Examination Law)
- CAS No.
- U.N. classification & U.N. No.

Type of hazardousness/harmfulness

Emergency measure
- When entered eyes
- When stuck on the skin
- When inhaled
- When swallowed

Measures at a fire
- Fire extinguishing method
- Fire extinguishing agent

Measures at leakage

Precautions for handling and storage
- Handling
- Storage

Exposure preventive measures
- Controlled density
- Allowable density
  - Japan Industrial Hygiene Institute (Edition)
  - ACGIH (Edition)
  - Other exposure limit value, reference value
- Measures for facility
- Protective equipment
  - Breathing protective equipment
  - Goggles
  - Protective gloves
  - Protective clothing

Bowman Refrigeration 206-706-3033

Physico-chemical property

Appearance						
Boiling point	°C	Steam pressure	Pa	(	°C)	Volatile
Melting point	°C	Specific gravity or bulk specific gravity		(	°C)	
Solubility Water			%	(	°C)	
Other solvent	(	)	%	(	°C)	
Others						

Hazardousness information (Stability, reactivity)

Flash point	:	°C	Fire point	:	°C
Explosion limit Upper limit	:	%	Lower limit	:	%

Inflammability :
Flammability : (Autogenous ignition, reactivity for water)
Oxidization :
Self-reactivity/explosiveness:
Dust explosiveness :
Stability/Reactivity :
Others :

Harmfulness information (including a human case, epidemiological information)

Corrosiveness :
Stimulativeness (Skin, eyes) :
Sensitization :
Acute toxicity (incl. 50% lethal dose):
Subacute toxicity :
Chronic toxicity :
Cancer source property :
Variation source property (Micro-organism, chromosomal aberration) :
Reproductive toxicity :
Teratogenicity :
Others (incl. toxic gas generation when reacted on water) :

Environmental impact information

Precautions for scrapping

Precautions for transportation

Applicable laws

Others
(1) If description space is not enough, attach detailed information.
(2) Reference for inquiry on the contents of description, quoted references, etc.

Bowman Refrigeration 206-706-3033

2 Structure and Specifications of the Compressor

2.1 Features of the 170J-Series Screw Compressor

The 170J-series is a high-performance and sophisticated single-stage screw compressor with the following features: a new rotor profile utilizing MAYEKAWA's advanced technology (J profile); a variable Vi (internal volume ratio) mechanism that operates with various conditions; the compressor can operate with various types of refrigerants; and high design pressure of 3.5 MpaG and flexibility of a wide range of operation conditions in various applications.

■ High Efficiency

The compressor is highly efficient because it utilizes MAYEKAWA's new "J" rotor profile.

The continuous capacity control system makes operation economical by matching the fluctuation in load.

Efficiency is not affected by variations in operation conditions because of the variable Vi control system.

■ High Reliability

The 170J-series has extended the operating time without overhaul because of the following features.

A new rotor profile that reduces the bearing load, radial sleeve bearings specially designed with MAYEKAWA's original technology and special high-load capacity thrust ball bearings.

The 170J-series achieves an improvement of reliability because the design pressure is higher than the standard model, O-rings are used for sealing between casing and the bellows type mechanical seal are adopted for shaft seal.

■ Easy Packaging due to Integrated Functional Devices

The compressor has an integrated suction check valve, a mounted hydraulic solenoid valve for capacity control and variable Vi control, and is coupled with flange motors in the standard. These features make packaging design easier.

■ Less Vibration/Noises

The new rotor profile along with other various design considerations have reduced noise and vibrations further.

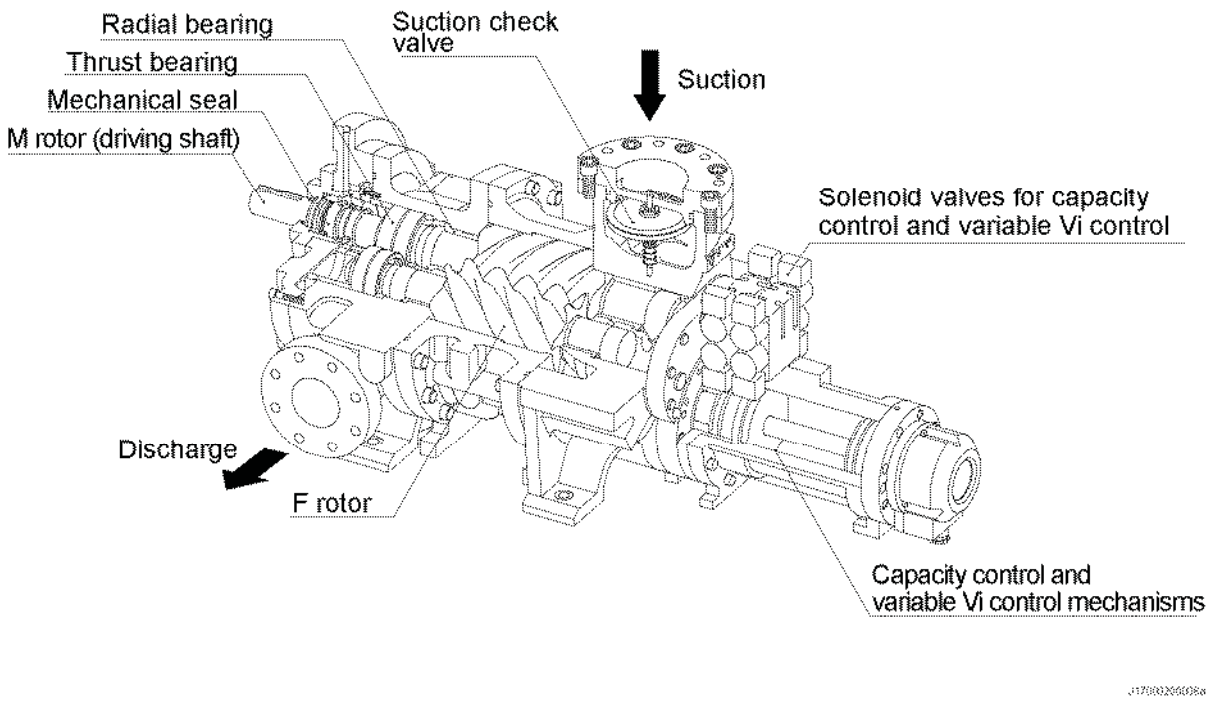

Figure 2-1 Structure of Compressor

Bowman Refrigeration 206-706-3033

2.2 Compressor Specifications

2.2.1 Specifications

Table 2-1 Specifications of the 170J-Series Compressor

Item		170		
		S	M	L
Refrigerant	–	NH_3, HFC, CO_2, and HC		
Weight	kg	685	715	760
Rotation direction	–	CCW viewed from motor		
Minimum rotation	rpm	1450		
Maximum rotation	rpm	4500		
Allowable maximum input power				
@3550 rpm	kW	360		
@2950 rpm	kW	300		
GD2	kgm^2	0.354	0.444	0.561
Suction flange	–	ANSI #300 5”		
Discharge flange	–	ANSI #300 3”		
Oil filler flange	–	ANSI #300 3/4”		
E port	–	ANSI #300 1”		
I port	–	ANSI #300 3/4”		
Theoretical displacement @3550 rpm	M^3/h	469	610	793
@2950 rpm	M^3/h	390	507	659
Capacity control	–	25 to 100% (or 30 to 100% in the case of L size)		
Vi control	–	Standard: 2.5 to 5.0 (Low Vi model: 2.0 to 3.5)		
Design pressure	MPaG	3.5		
Maximum suction pressure	MPaG	1.0		
Minimum suction pressure	MPaG	-0.080		
Maximum discharge pressure	MPaG	3.2		
Differential pressure for lubrication	MPa	Minimum: (Discharge pressure - Lubrication pressure) ≤0.15		
Minimum suction temperature	°C	-50		
Maximum discharge temperature	°C	100 (120)		
Minimum lubrication temperature	°C	20		
Maximum lubrication temperature	°C	70		
Suction check valve (integrated)	–	○	○	○
Solenoid valve (integrated)	–	○	○	○
Oil filter	–	β12≥75 (Guideline: 15μm or less in nominal value)		

Note 1: The standard connection flanges of the compressor conform to ANSI CLASS 300. DIN and JIS are optional specifications.

Note 2: All connection fittings are Rc1/2 (=NPT1/2) for interchangeability.

Note 3: It is possible to manufacture a compressor that can operate up to 120°C as the maximum discharge temperature as optional specifications.

Bowman Refrigeration 206-706-3033

2.2.2 Outer Dimensions

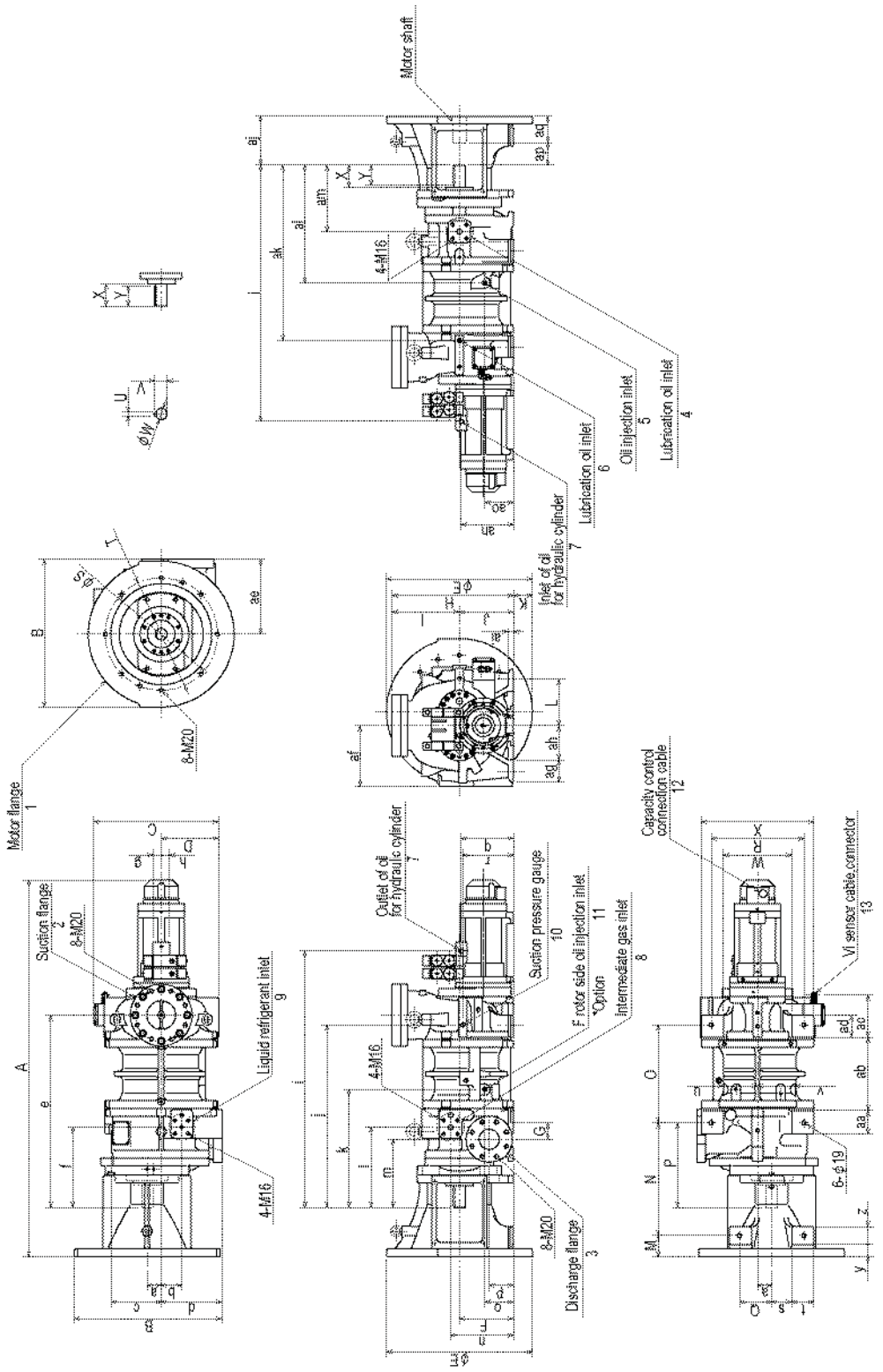

Figure 2-2 External Dimensions of the 170J-Series

Bowman Refrigeration 206-706-3033

■ For NEMA Flanges

Unit: mm

Item		170			Item	170		
		S	M	L		S	M	L
1		NEMA			A	63.9		
2		ANSI #300 5”			B	92		
3		ANSI #300 3”			C	225		
4		ANSI #300 1”			D	275		
5		RC 1/2			E	744.8	800	872
6		RC 1/2			F	365		
7		RC 1/2			G	38		
8		ANSI #300 1”			H	38		
9		ANSI #300 3/4”			I	1034.8	1090	1162
10		RC 1/2			J	699.8	755	827
11		RC 1/2			K	536		
12		PF 3/4			L	365		
13		Connector			M	310		
A		1576.8	1632	1704	N	285		
B		668.9			O	130		
C		565			P	110		
D		260			Q	236.5		
E		Φ660			R	230		
F		245			S	91		
G		75			T	100		
H		550			U	155		
I		305			V	170.2		
J		245			W	310		
K		85			X	510		
L		210			Y	55		
M		95			Z	80		
N		511			Aa	105		
O		314.8	370	442	Ab	204.8	260	332
P		385			Ac	190.5		
Q		146			Ad	100		
R		420			Ae	338.9		
S		φ457.2			Af	275		
T	44*D	P.C.D 508			Ag	100		
	50*D	P.C.D 558.8			Ah	155		
U		$16^{0}_{-0.043}$			Ai	25		
					Aj	221		
V		$56^{0}_{-0.29}$			Ak	669.8	725	797
					Al	536		
W		$\phi\ 52^{+0.012}_{-0.007}$			Am	300		
					An	236.5		
X		100			Ao	130		
Y		90			Ap	100.3		
					Aq	120.7		

Bowman Refrigeration 206-706-3033

■ For IEC FF Flanges

Unit: mm

Item		170			Item	170		
		S	M	L		S	M	L
1		IEC			A	63.9		
2		ANSI #300 5”			B	92		
3		ANSI #300 3”			c	225		
4		ANSI #300 1”			d	275		
5		RC 1/2			e	744.8	800	872
6		RC 1/2			f	365		
7		RC 1/2			g	38		
8		ANSI #300 1”			h	38		
9		ANSI #300 3/4”			i	1034.8	1090	1162
10		RC 1/2			j	699.8	755	827
11		RC 1/2			k	536		
12		PF 3/4			l	365		
13		Connector			m	310		
A		1596.8	1652	1724	n	285		
B		668.9			o	130		
C		565			p	110		
D		260			q	236.5		
E		φ660			r	230		
F		245			s	91		
G		75			t	100		
H		550			u	155		
I		305			v	170.2		
J		245			w	310		
K		85			x	510		
L		210			y	75		
M		95			z	80		
N		511			aa	105		
O		314.8	370	442	ab	204.8	260	332
P		385			ac	190.5		
Q		146			ad	100		
R		420			ae	338.9		
S	FF-500	φ450			af	275		
	FF-600	φ550			ag	100		
T	FF-500	P.C.D 500			ah	155		
	FF-600	P.C.D 600			ai	25		
U		$16^{0}_{-0.043}$			aj	241		
					ak	669.8	725	797
V		$56^{0}_{-0.29}$			al	536		
					am	300		
W		$\phi\ 52^{+0.012}_{-0.007}$			an	236.5		
					ao	130		
X		100			ap	101		
Y		90			aq	140		

Bowman Refrigeration 206-706-3033

2.3 Operation Limits

Table 2-2 Operation Limits of the 170J-Series Screw Compressor

Item	Limit value
Maximum discharge pressure	3.2 MPaG
Maximum suction pressure	1.0 MPaG
Minimum suction pressure	-0.080 MPaG
Minimum lubrication pressure	Pd - 0.15 MPaG
Maximum discharge temperature	100°C
Maximum lubrication temperature	70°C
Minimum lubrication temperature	20°C
Maximum rotation speed (M rotor)	4500 rpm
Minimum rotation speed (M rotor)	1450 rpm
Refrigerant	NH_3, HFC, $CO_2$and HC

Note 1: The 170J-series compressors must be used within the allowable operation range defined in the table above and Figure 2.3 Operation Limit Chart. (The pressure values in the operation limit chart are absolute values [MPaA].)

Note 2: The 170J-series consists of three models with the L/D varying in S, M, and L.

Note 3: "Pd" is the discharge pressure (gauge pressure).
The lubrication for the capacity control is mainly supplied by differential pressure, but pressurized lubrication by oil pump may be necessary during initial adjustment or emergency stop when there is not sufficient differential pressure for lubrication.

Note 4: Do not operate the compressor with a partial load under 30% of the specified load for along time, except during compressor startup. Doing so may cause abnormal vibrations and noises.

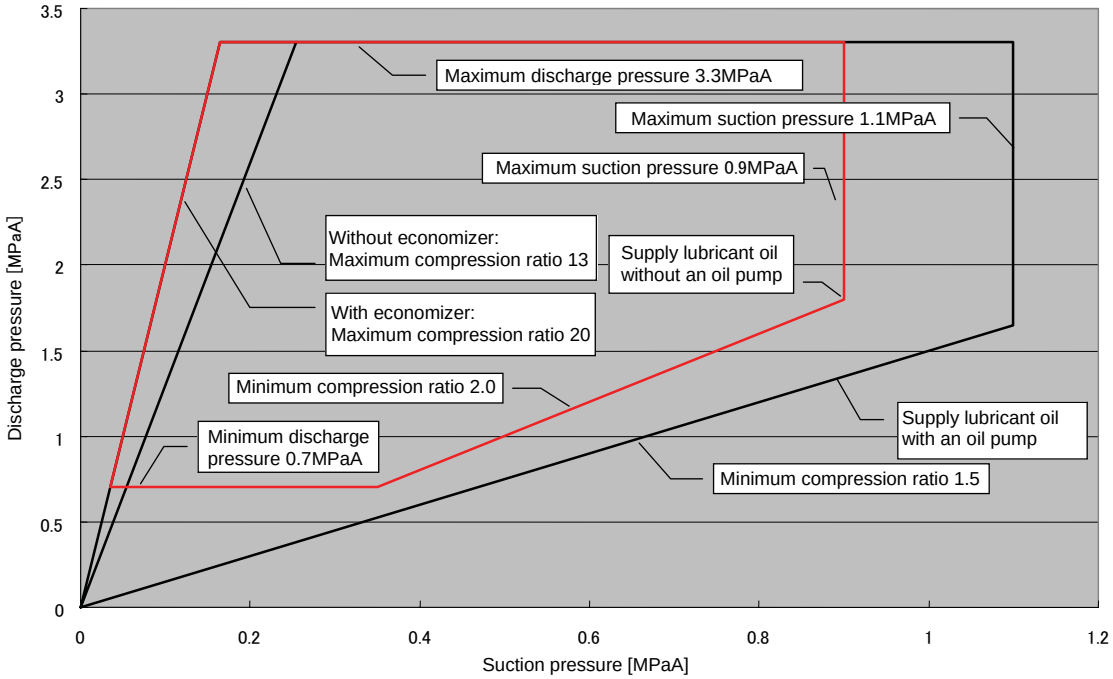

Figure 2-3 Operation Limits Chart

Bowman Refrigeration 206-706-3033

2.4 Structure of The Compressor

【POINT】

- For the names and locations of the compressor components, refer to "7.1 Development View and Configuration Table of the Parts".

2.4.1 Sectional View

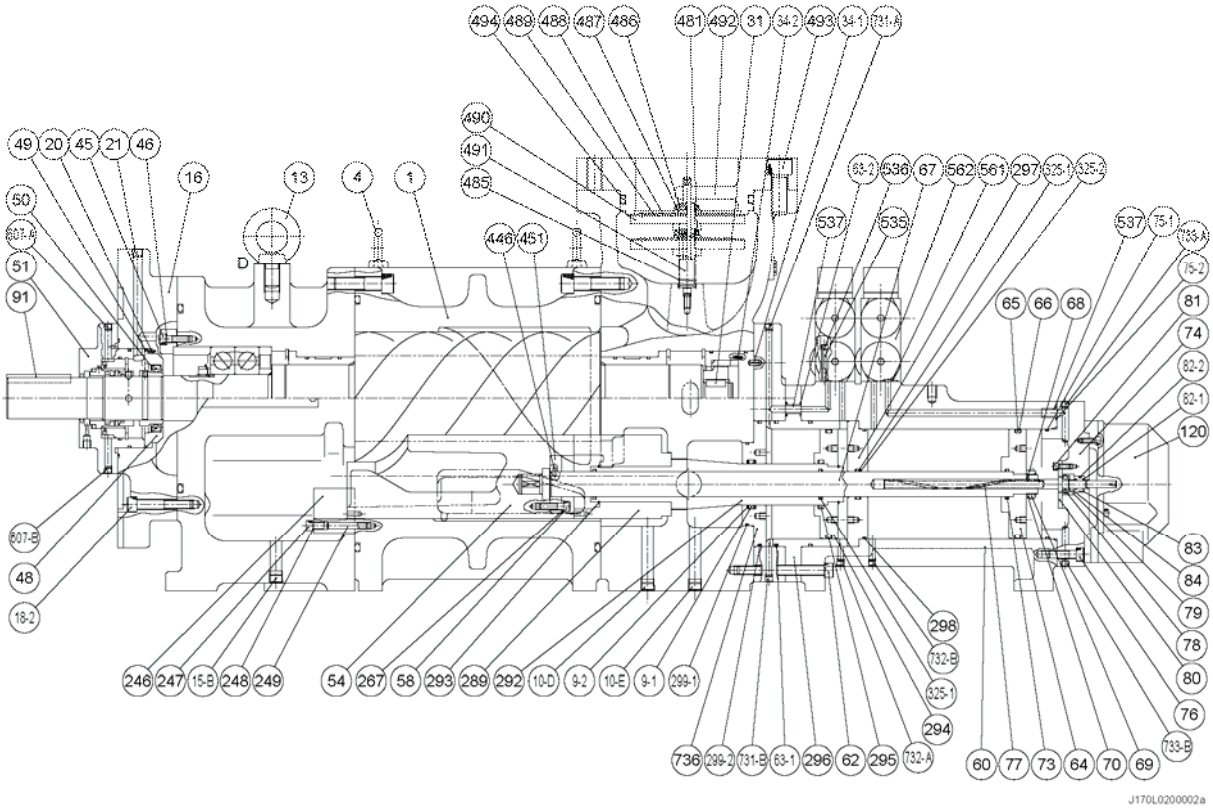

Figure 2-3 Sectional View of the 170J-Series (1/3)

Bowman Refrigeration 206-706-3033

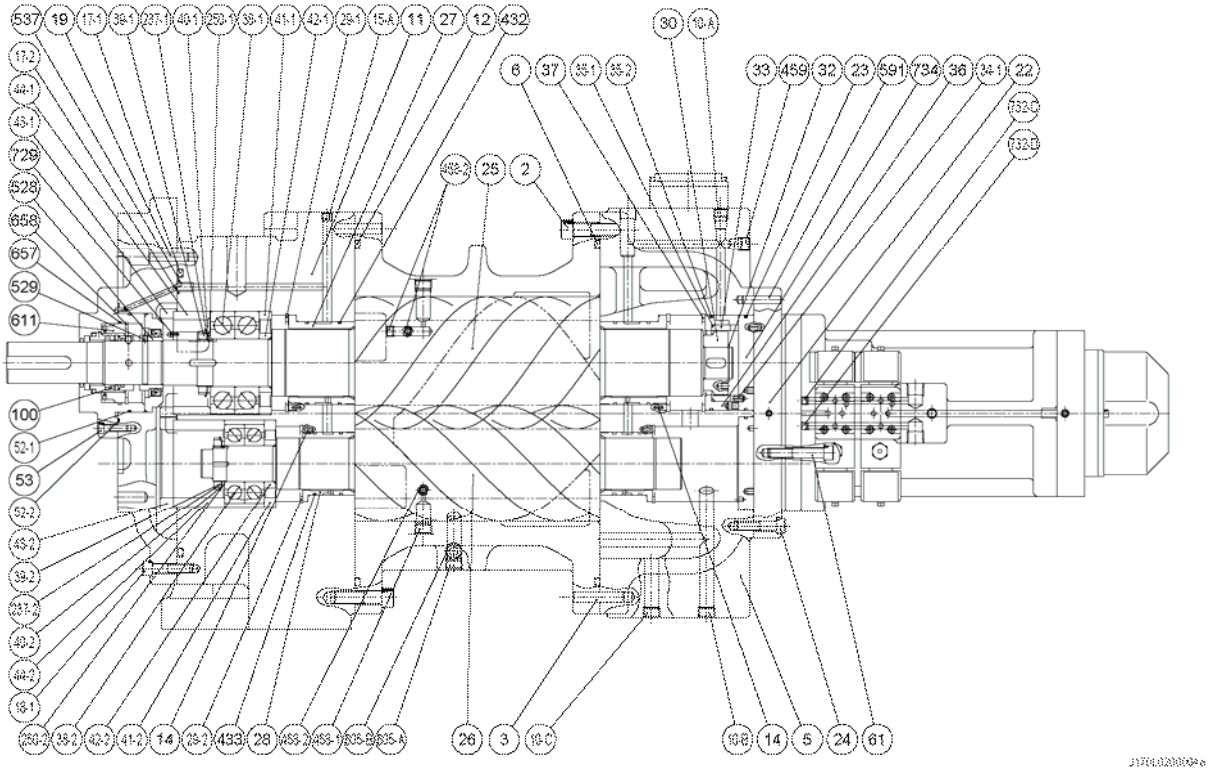

Figure 2-4 Sectional View of the 170J-Series (2/3)

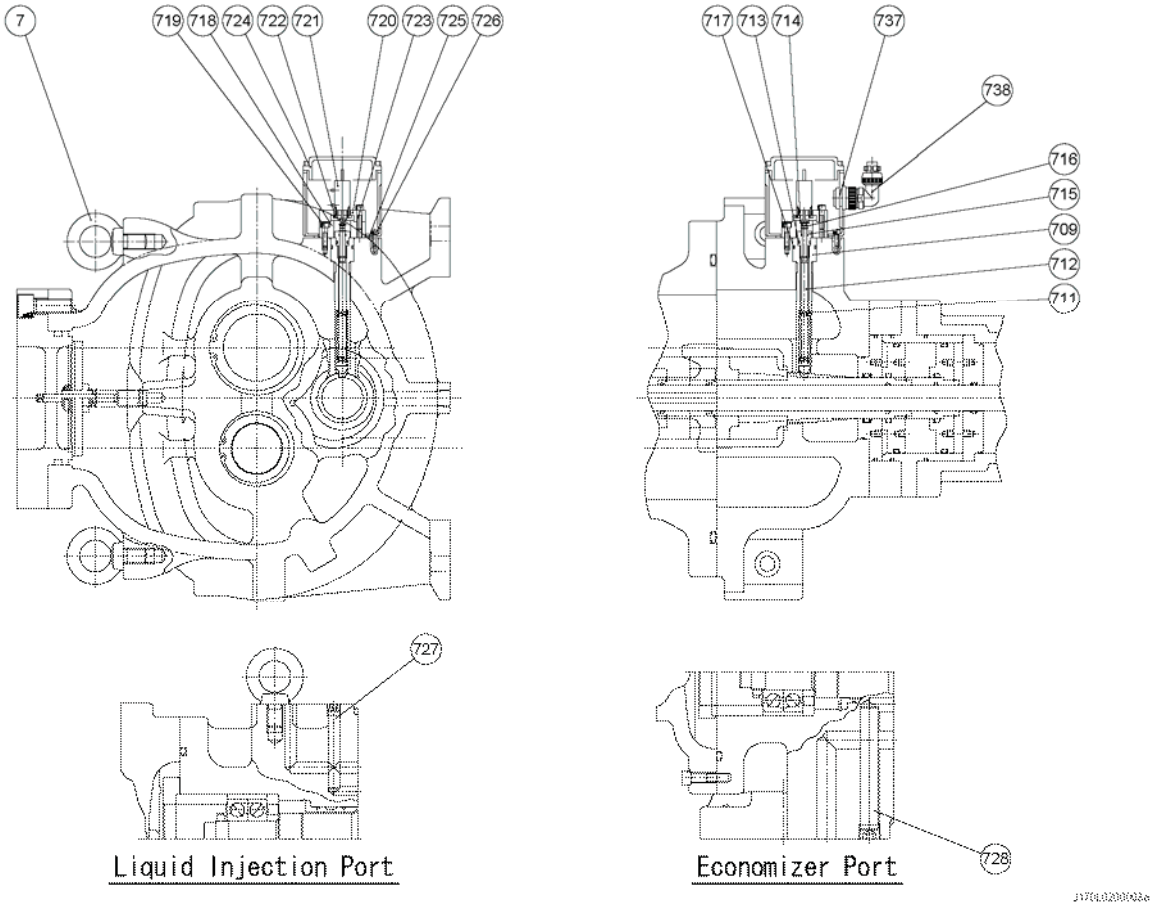

Figure 2-5 Sectional View of the 170J-Series (3/3)

Bowman Refrigeration 206-706-3033

2.5 Mechanisms

2.5.1 Basics of The Screw Compressor

The screw compressor is a positive displacement rotary compressor. It has the features of both the reciprocating and centrifugal compressors. As shown in Figure 2-6 and Figure 2-7, the refrigerant (gas) is continuously compressed by changing the volume between the casing, male and female meshed screw rotors, which have different profiles.

The rotor with five lobe sections is called the male (M) rotor while the one with six lobe sections is called the female (F) rotor.

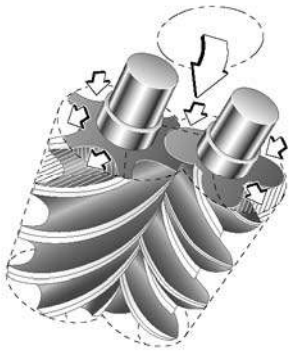

Figure 2-6 Compressor Mechanisms

The compressor is driven by a 2 pole type motor connected to the M rotor shaft and drives the compressor at 2,950rpm (50Hz) or 3,550rpm (60Hz).
The 170J-series compressor is normally driven by a flange motor and is able to operate continuously at variable rotation speed control when used with a variable speed driver.

The newly developed J profile optimizes the rotor profile and mating, thereby improving the compressor efficiency significantly.

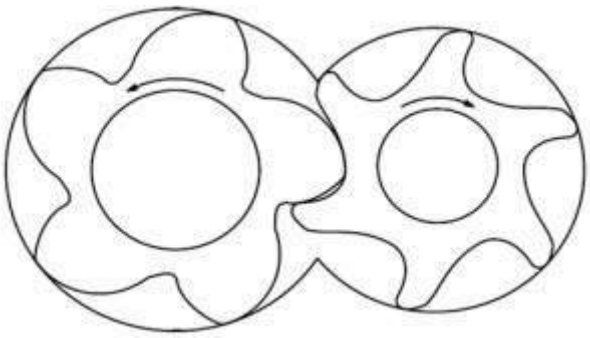

Figure 2-7 J Profile

Bowman Refrigeration 206-706-3033

2.5.2 Suction Process

As show in Figure 2-8, rotors with different lobe profiles that mesh intricately start the suction process. The volume enclosed between the M and F rotor lobes and compressor casing increases from the suction side as the rotors turn. When the volume is at its maximum, the rotors start to trap the gas between the lobes and compressor casing thereby isolating the gas from the suction port.

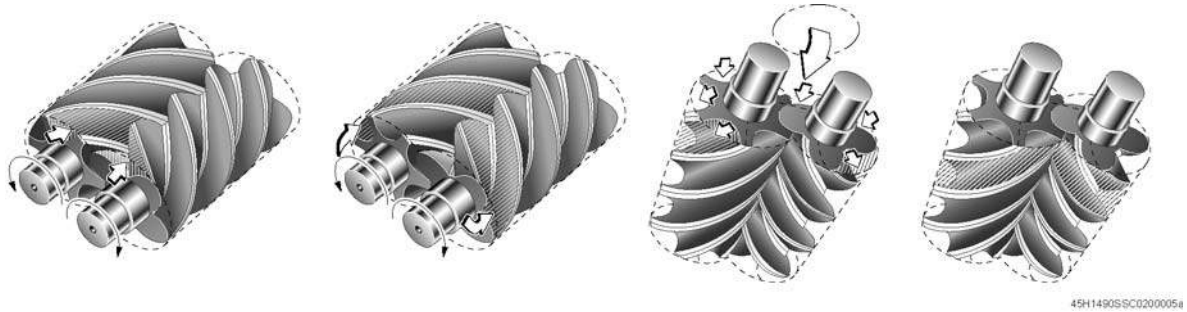

(1) Start of suction (2) Suction continues (3) Just before suction completion (4) Suction side sealed

Figure 2-8 Suction Process

2.5.3 Compression Process

As the rotors further rotate, the sealing line between them moves toward the discharge side and the volume between the rotor lobes decreases and compresses the trapped gas.

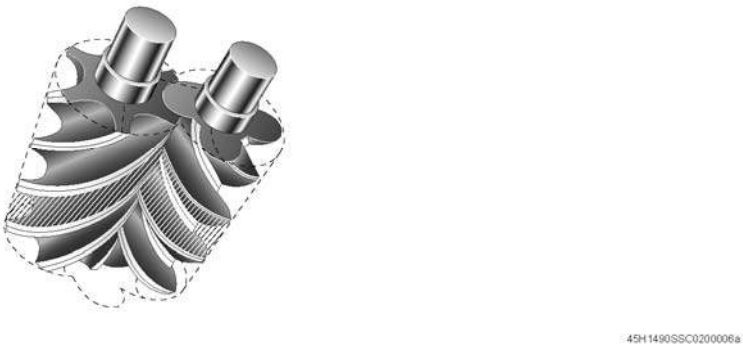

Figure 2-9 Compression Process

2.5.4 Discharge Process

The volume between rotor lobes decrease to a predetermined value at the discharge port. As the rotors further rotate, the compressed gas is pushed out from the discharge port to the outlet of the compressor.（Refer to Figure 2-10)

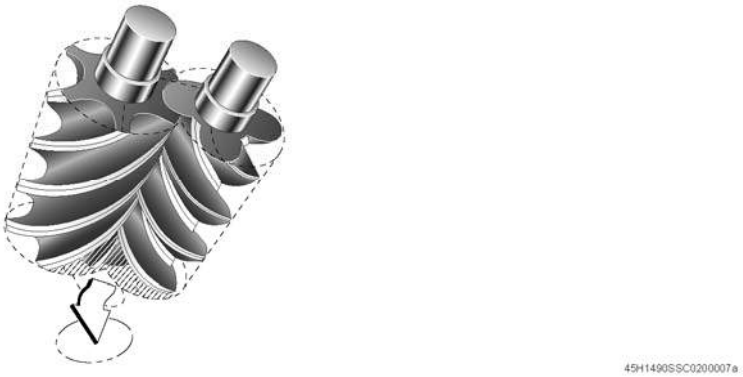

Figure 2-10 Discharge Process

Bowman Refrigeration 206-706-3033

2.6 Oil Flow

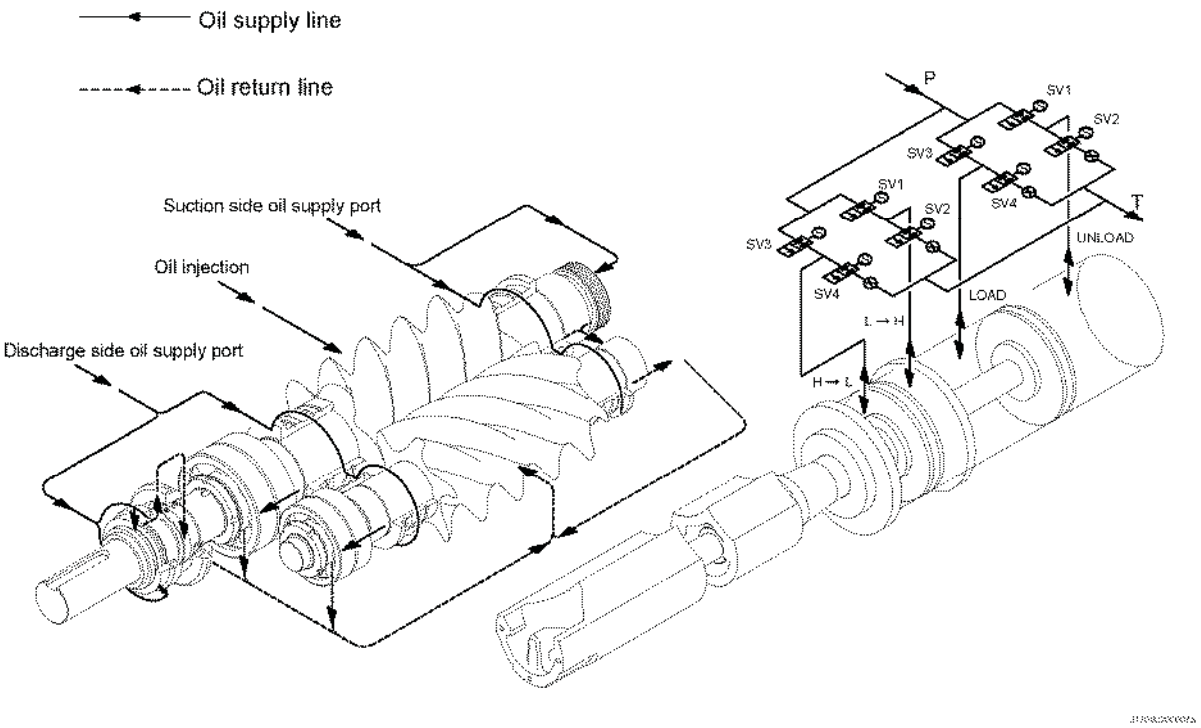

Figure 2-11Oil Flow

Bowman Refrigeration 206-706-3033

2.7 Capacity Control Characteristics

The 170J-series can vary capacity continuously (25 to 100%) using the slide valve capacity control.
This control system offers a wide capacity control range with high efficiency by hydraulic control.

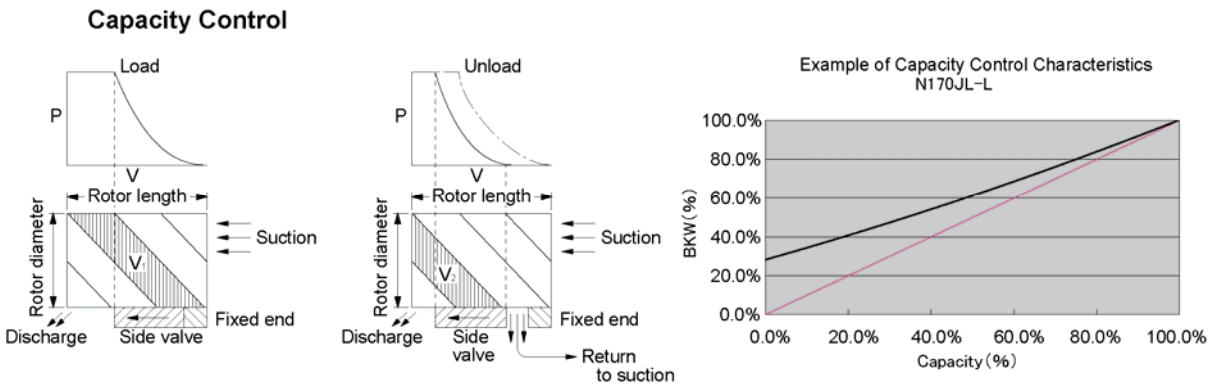

Figure 2-12 Slide Valve Capacity Control Structure and Capacity Control Characteristics

Bowman Refrigeration 206-706-3033

2.8 Variable Vi Control

2.8.1 Vi (Internal Volume Ratio)

For a screw compressor, the volume of refrigerant gas trapped between the M and F rotor lobes decreases while the pressure increases as the rotors turn. When the trapped volume decreases to the designed Vi (internal volume ratio), the volume is exposed to the discharge side and the refrigerant gas is discharged.

As described above, for a screw compressor, the Vi (internal volume ratio) indicates the ratio of the volume of sucked refrigerant gas to the compressed minimum volume when the interlobes connect to the discharge outlet port (the volume before discharged).

Vi is shown as follow.

$$\text{Vi} = \frac{\text{(Volume of refrigerant gas (after suction) when compression begins)}}{\text{(Volume of refrigerant gas when discharge port opens (end of compression))}}$$

Vi is the ratio of the volume between rotor lobes and casing after completion of suction and the volume when discharge port starts to open. The 170J-series basically adopts three Vi values of 2.50, 3.50, and 5.0 which are called ‘L port’, ‘M port’, and ‘H port’ respectively.

Vi is expressed as follows with the compression ratio.

$$\text{Vi} = \left(\frac{\text{Pd}}{\text{Ps}}\right)^{\frac{1}{\kappa}} \quad \text{or} \quad \text{Vi}^{\kappa} = \frac{\text{Pd}}{\text{Ps}}$$

As shown above, Vi is related to the specific heat ratio (κ) of the refrigerant gas. Therefore, Vi values vary not only with the compression ratio but also the type of refrigerant gas. The 170J-series compressors are designed to automatically adjust Vi according to operating conditions using the controller.

Bowman Refrigeration 206-706-3033

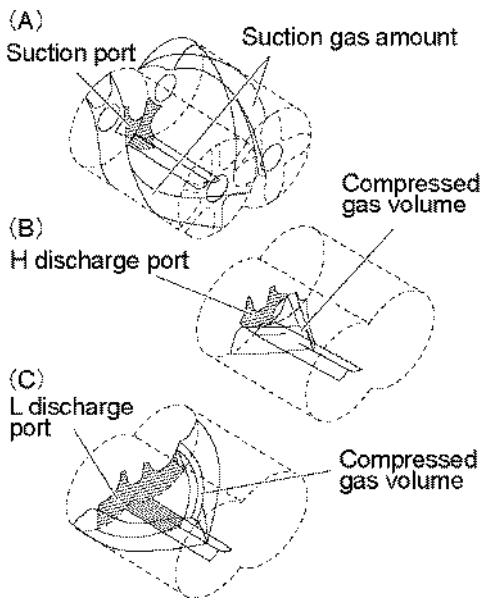

Figure 2-13 Explanation of Vi (Internal Volume Ratio)

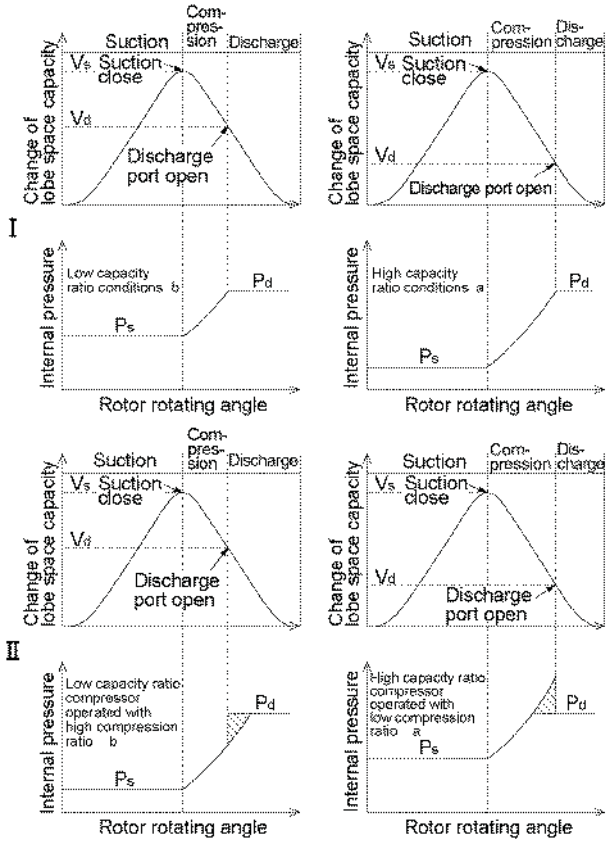

Figure 2-14 Relationship between Vi Settings and Operation Conditions

2.8.2 Reasons for Adjusting Vi According to Operating Conditions

Operating conditions for the compressor differs with applications. The same compressor may be operated under a variety of pressure conditions such as air conditioning, cold storage and freezing. Also, the discharge pressure may vary depending on the type of condenser or climate conditions. Even in the same application, some conditions may vary. For example, a compressor for air conditioning has different operating conditions for the cooling mode and the heating mode. And a compressor for refrigeration may have different operating conditions depending on the storage room temperature. Compressors are always required to operate with maximum efficiency in these varying operating conditions.

For a compressor without a variable Vi mechanism, power is wasted when the fixed Vi does not match the operating conditions (refer to Figure 2-13 and Figure 2-14). For example, if a compressor with a high Vi discharge port (suitable for a high compression ratio) is operated at low compression ratio conditions, the gas between the rotor lobes increases internal pressure to a value higher than the discharge pressure before it is released to the discharge port, this results in extra compression power. On the other hand, if a compressor with a low Vi discharge port is operated at high compression ratio conditions, the gas between the rotor lobes is released to the discharge port before the internal pressure reaches discharge pressure. This results in backflow of the high pressure gas to the discharge side which wastes extra power to push back the backflow gas. These characteristics are inevitable for a fixed Vi screw compressor and become obvious when the discharge port Vi does not match the actual operation conditions.

The 170J-series has a structure that can vary Vi of the discharge port according to operating conditions, therefore, it provides the advantage of operating at a wide range of conditions with high efficiency.

Bowman Refrigeration 206-706-3033

2.8.3 Details of Variable Vi Mechanism

The 170J-series varies the Vi by moving the variable Vi slide valve with a hydraulic cylinder thus changing the radial discharge port located in the unloader slide valve.
The Vi is increased when oil is supplied to the Vi increase side of the hydraulic cylinder. The variable Vi slide valve moves towards the discharge side, and the unloader slide valve moves so that the radial discharge port becomes smaller and Vi is increased.
On the other hand, the Vi is decreased when oil is supplied to the Vi decrease side of the hydraulic cylinder and the variable Vi slide valve moves towards the suction side. The radial discharge port becomes large and Vi is decreased.
The position of the variable Vi slide valve can be detected by the Vi position sensor. The 170J-series can always control Vi to an optimum value with a specified controller (CP4) according to measured operating conditions (such as suction and discharge pressure).

2.8.3.1 Automatic Variable Vi Mode

In the automatic variable Vi mode, the 170J-series calculates the optimum Vi from the measured operating pressures using a specified controller (CP4) and adjusts the hydraulic pressure on the Vi increasing side or the Vi decreasing side of the hydraulic cylinder to move the variable Vi slide valve to a suitable position for the calculated Vi.

Note 1: Basically, the automatic variable Vi control is achieved in three steps, L, M, and H.（Not continuously）

Note 2: Do not frequently vary the Vi automatically. This may lead to deterioration of reliability such as early wear to the related components.

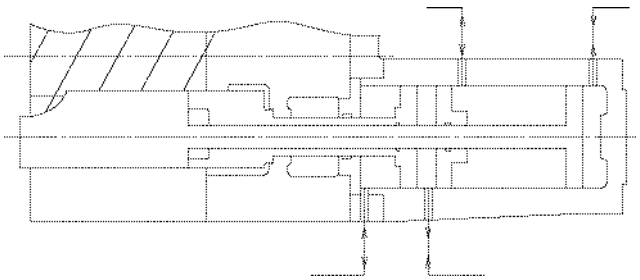

2.8.3.2 Fixed Vi Mode

The 170J-series also allows for fixed Vi if the operating conditions are stable and the automatic variable Vi control is not necessary.

Note, however, a specified controller (CP4) is required to adjust the variable Vi slide valve to the desired Vi value. It is able to set Vi to the following three ports: L port (Vi=2.0), M port (Vi=3.5), H port (Vi=5.0).

Note 1: For the 170J-series, a specified controller (CP4) is always required.

Bowman Refrigeration 206-706-3033

2.8.4 Vi Position Sensor

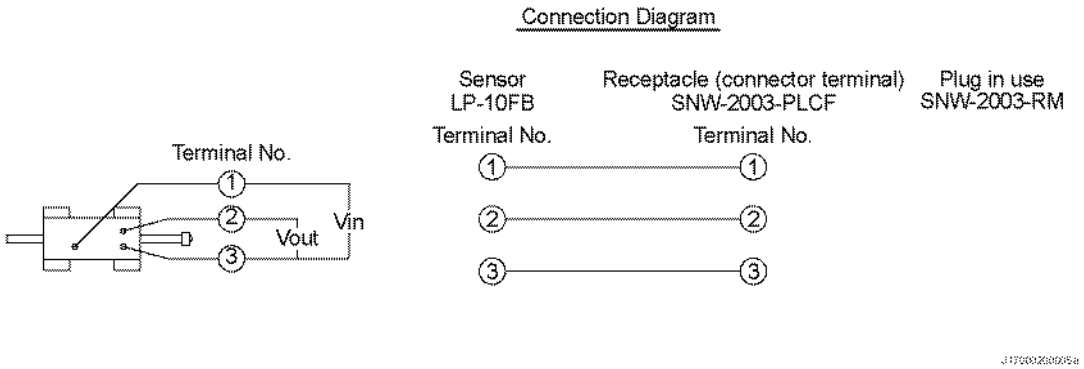

Figure 2-15 Vi Sensor Wiring Diagram

Table 2-3 Relationship between Vi and Vi Sensor Output

Port	Vi	Ratio to full stroke (%)	Resistance (Ω)	Output voltage ratio (%)
L	2.5	0	830	83
M	3.5	56	550	55
H	5.0	100	330	33

Table 2-4 Specifications of the Potentiometer

Item	Specifications
Total resistance	1kΩ
Rated power	0.3W/50°C
Insulation resistance	100MΩ or more 500V DC
Withstanding voltage	500V AC for 1 minute
Working temperature range	-40—100°C

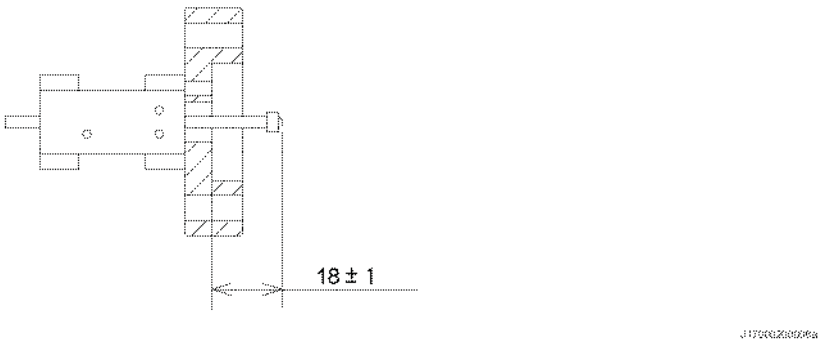

Figure 2-16 Vi Sensor Dimensions

Bowman Refrigeration 206-706-3033

2.9 Solenoid Valve

The 170J-series are provided with solenoid valve assemblies for capacity and variable Vi control.

Table 2-5 Specifications of the Solenoid Valves

Type	SBL5-4BL	EVRB
Maximum working differential pressure	1.6 MPa	2.2 MPa
Minimum working differential pressure	0.0 MPa	0.0 MPa
Operation fluid	Refrigerant oil	Refrigerant oil
Fluid temperature	Below 100°C	Below 100°C
Ambient temperature	-20—40°C	-20—40°C
Maximum working pressure	3.5 MPa	3.5 MPa
Maximum working viscosity	120 cSt	120 cSt
Proof counter pressure	0.45 MPa (information only)	0.44 MPa (information only)
Flow rate coefficient (Cv value)	0.33—0.35	0.20—0.25

Note 1: The proof counter pressure indicates the pressure working against the direction of flow at which the plunger opens automatically. This control can prevent an abnormally high pressure inside the cylinder due to liquid enclosing .

Table 2-6 Specifications of the Coil for SBL5-4BL

Rated voltage	Lead wire color	Frequency	Effective power	Allowable voltage fluctuation
100V AC	Black	50/60 Hz	15/12 W	±10%
110V AC				
120V AC	Blue			
200V AC	Red			
220V AC				
240V AC	Blue			

Table 2-7 Specifications of the Coil for EVRB

Rated voltage	Frequency	Effective power	Allowable voltage fluctuation
115V AC	60 Hz	10 W	+10— -15%
220 - 230V AC	50 Hz		+6— -15%
220 - 230V AC	50/60 Hz		+6— -10%

Bowman Refrigeration 206-706-3033

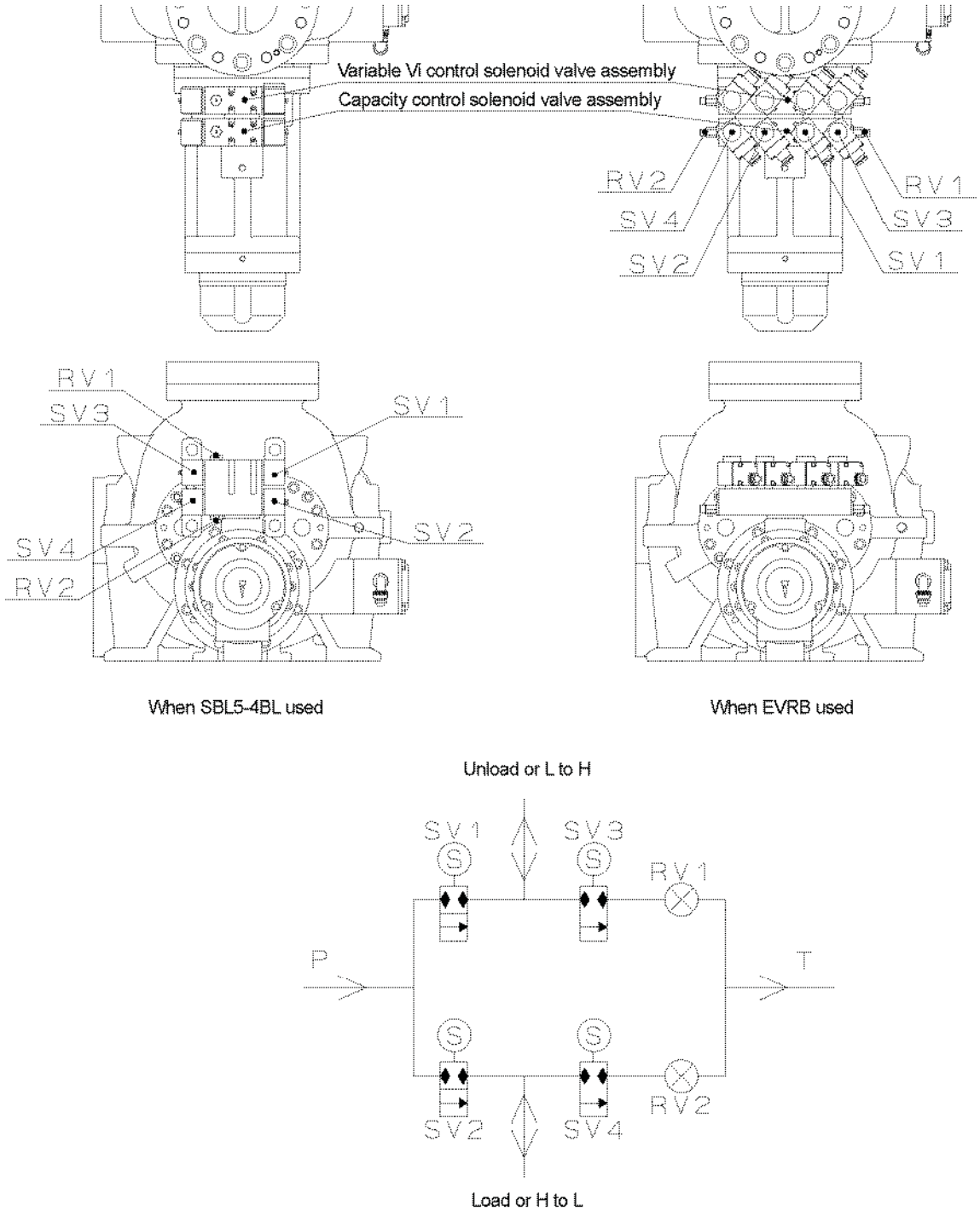

Figure 2-17 Hydraulic Circuit for Solenoid Valve Assembly

Table 2-8 Capacity Control and Variable Vi Control

	SV1	SV2	SV3	SV4	RV1	RV2
Load	Off	On	On	Off	*	-
Unload	On	Off	Off	On	-	*
H→L	Off	On	On	Off	*	-
L→H	On	Off	Off	On	-	*

Note 1: If it is not possible to adjust capacity or variable Vi control because a hunting occurred and the unloader slide valve or the Vi slide valve move too fast, carry out the appropriate adjustment by decreasing the openings of RV (*) valves.

Bowman Refrigeration 206-706-3033

3 Installation

3.1 Precautions for Installation

Basically the 170J-series is delivered as a standard package consisted of the compressor.

Figure 3-1 Photo of the Package

【POINT】

- This chapter is based on the assumption that the compressor is installed to standard packages for the purpose of refrigeration, cold storage, and air conditioning.
  If the package is not standard and the installation procedure is different from the contents of this manual, prepare an installation procedure manual referring to this chapter and considering safety precautions, before installing the compressor.
  If there are any questions, please contact your local sales offices or service centers.

- Insure that installation is performed by a qualified personal or contracting company. Make sure that the work is performed in compliance with local laws and ordinances.
- Read this chapter and related documents, and fully understand their contents before performing installation.
- Electrical work must be performed only by a qualified worker.
- Do not let anyone to be or enter any part of body under the lifted compressor.

Bowman Refrigeration 206-706-3033

3.2 Installation Work

3.2.1 Unpacking

When unpacking the compressor, make sure that the compressor body is not damaged. Check that there are no abnormalities.

【POINT】

- If there are abnormalities or deficient parts on the compressor, please contact your local sales office or service center immediately.
- Unnecessary packaging materials should be discarded according to the laws and ordinances, or your company's rules.

3.2.2 Storage

To store the compressor before installation;

- Store it indoors.
- Seal nitrogen gas in the compressor. (Pressure: approximately 0.2 MPa)

3.2.3 Transfer

⚠ DANGER

- **Dropping of the lifted compressor may cause death or serious injury to the worker. Do not allow anyone to be under the lifted compressor.**

1. To lift the compressor, use lifting equipment with sufficient load for the weight of the compressor and appropriate lifting slings having proof load of more than the weight of compressor.
2. Secure sufficient space for safe lifting.
3. Check the lifting slings before use. Thoroughly check the lifting slings for any problems (such as deformation, knot, wire breakage). Do not start lifting unless the lifting slings are verified that they have no problems. If you cannot make correct evaluation or judgment, entrust an expert to inspect the lifting slings.
4. To lift the compressor, attach the lifting slings to the attached eyebolts using appropriate shackles and hooks. The eyebolts are only used for lifting the compressor. Do not use the eyebolts to lift the compressor with any attached apparatus.

⚠ DANGER

- **The compressor eyebolts must not be used to lift the package. To lift the package, use the lifting chains on the base periphery or other lifting devices provided on the base.**

5. Check the transportation route for any obstacles in consideration of the compressor size.
6. Before lifting, check that the lift hook is located on the vertical line leading from the gravity center of the compressor.
7. Instruct all workers to move from near the work site before lifting.
8. Before lifting the compressor, alert all workers on the site of possible dangers of the lifting process by signal (such as calling at the beginning of the work or making a signal with hand). Remove all nonessential workers from area until lift is complete. Do not lift the compressor unless the signals are completely understood by the all personal working together.
9. Slowly reel up the winch immediately before the compressor is away from the ground.
10. Then, reel up the winch further until the compressor is completely away from the ground and check that the compressor is not inclined. If the compressor is inclined, return the compressor on the ground and correct the inclination by adjusting the lifting slings. Then, restart the lifting operation.

Bowman Refrigeration 206-706-3033

11. Make sure to reel up the compressor slowly. Lifting it too quickly may damage the lifting slings or part of the compressor.

12. After lifting the compressor, check the wire ropes or lift slings. Check that the compressor is held horizontally.

13. When moving the lifted compressor, always use a guiding rope.

14. When moving the compressor, turn away workers from the movement direction and check safety.

15. Do not lift the compressor above any safety passage unless in unavoidable case.

16. Do not put the compressor in a safety passage. Always keep the safety passage free of obstacles.

17. Remove any obstacles before putting down the compressor on the ground. The compressor should not be inclined or unstable.

18. Before putting down the compressor on the ground, announce to the workers around the working area.

19. When lowering the compressor onto two or more blocks, use blocks with the same height so that the compressor is horizontal and stable.

20. Lower the compressor slowly so that it dose not get damaged or collided.

3.2.4 Preparation for Installation

■ Installation Space

Prepare sufficient working space for easy operation, cleaning, maintenance, and inspection.

■ Illumination

Prepare lighting for easy operation, cleaning, maintenance, and inspection.

■ Ventilation

If natural ventilation is insufficient, install ventilation fans according to the regulations.

■ Piping

Refer to "2.2.2 Outer Dimensions".

Bowman Refrigeration 206-706-3033

3.2.5 Installation

3.2.5.1 Installation

The standard 170J-series has a structure coupled with a flange motor. The compressor can only be installed to the motor by connecting with the motor spacer.

For installation of the compressor in the package, the following two cases are assumed: Installing the compressor first (for package manufacturing); Motor and motor spacer are already present on package frame (for compressor maintenance).

The following procedure describes how to install the compressor to the motor spacer for maintenance purposes.

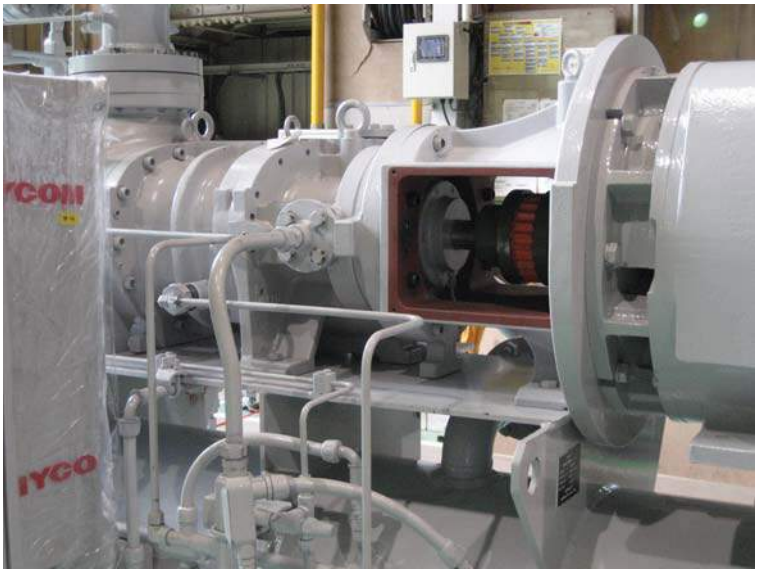

Figure 3-2 Motor Spacer

1. Attach the upper two safety bolts (M16 × 60) to the bearing cover flange face of the compressor.
2. Lift the compressor horizontally using lifting equipment such as a crane and align the compressor flange to the motor spacer flange by using the safety bolts on the bearing cover as the guide.
3. Insert two hexagon socket head cap screws (M16 × 60) in diagonal positions from the motor spacer side, and tighten them until the flanges are in contact.
4. Apply lubricant (molybdenum disulfide) to the parallel pin (13 dia. × 60) and insert the parallel pin by knocking it with a copper hammer from the motor spacer side.
5. Remove the safety bolts and insert all bolts and tighten them to the specified torque diagonally.
6. Remove the crane used to lift the compressor and check for any gaps between the base of package and the feet of the compressor. If there are any gaps, adjust the compressor height using shims and then fix the compressor to the base with bolts.

【POINT】

- When installing the compressor to the motor spacer, always use safety bolts.
- Do not hammer in the parallel pins while there are gaps between the flanges or the flanges are inclined. Make sure that the flanges are in close contact with each other and are aligned in height before hammering in the parallel pins.

For the installation of compressor and motor at unit manufacturing, refer to the appendix.

Bowman Refrigeration 206-706-3033

3.2.5.2 Piping

■ Refrigerant Piping

When constructing the refrigerant piping, follow the instructions below.

- The compressor is one of the few equipments with moving components in refrigerating, cold storage, and air conditioning packages. The moving components are adversely affected by foreign substances within the system (scale, dust, spatter). Therefore when constructing the piping, make sure that no such foreign substances enter the piping.
- The compressor is sealed with nitrogen gas before shipment to prevent internal rust. Before removing the flange of the compressor, make sure to purge/bleed the nitrogen gas from the attached valve on the compressor.
- Any moisture in the piping will cause problems when operating the compressor. When constructing the piping, make sure that all components are free of moisture.
- Inappropriate piping construction may cause operating problems such as refrigerant oil not returning to compressor or liquid flowing back to the compressor.
- When constructing the piping to the compressor, use a pipe with the same diameter as the compressor connection port. If the pipe size is smaller than the compressor connecting port, the refrigerant oil or refrigerant flow may be reduced, resulting in operating problems.
- When constructing the piping for the compressor, execute piping supports at appropriate positions so that excessive force is not applied to the compressor flange or connecting port.

3.2.5.3 Optional Accessories

■ Oil Filter

Install an oil filter with nominal filtration rating of [15 μm ($\beta_{12} \geq 75$) or less] in the lubrication line of the compressor.

The oil filter may clog just after test operation. We recommend installing two oil filters in parallel. This will enable replacement of either filter during operation.

■ Oil Heater

Install an oil heater in the oil separator to ensure sufficient refrigeration oil temperature before starting the compressor. Make sure to install a protection function to prevent overheating of the heater.

■ Suction Strainer

Install a suction strainer of 200 meshes or finer in the suction line.

During test operation, small particles and scale may come from the system. We recommend installing a fine temporally filter or replace with new filters after test operation.

■ Economizer, Liquid Injection Line Filter

When an economizer or liquid injection is used, install a filter of 100μm or finer in the line.

Bowman Refrigeration 206-706-3033

3.2.6 Compressor Protection Functions (Safety Device)

The170J-series has a specified controller (CP4) which must be used to protect the compressor with the controller's protection functions.

Figure 3-3 A Specified Controller (CP4)

In addition, the following sensors are installed in the package to protect the compressor. For further details such as sensor and controller settings, refer to the sensor and controller operation manual.

- Discharge temperature sensor (protection from abnormally high discharge temperatures)
- Lubrication temperature sensor (protection from abnormally high oil temperatures)
- Discharge pressure sensor (protection from abnormally high discharge pressures)
- Suction pressure sensor (protection from abnormally low suction pressures)
- Oil pressure sensor (protection from abnormal oil pressures)
- Motor input current ammeter (protection from motor overcurrent)

Figure 3-4 Controller Setting Screen

Check the sensors and controller for proper protection function operation during test runs.

Bowman Refrigeration 206-706-3033

3.2.7 Pressure Test (Leak Test)

Perform pressure tests before starting operation. To prevent moisture entering in the package, use nitrogen gas or dry air for the pressure test. Set the test pressure to the design pressure of the package and maintain the pressure for at least 30 minutes while checking the flange connections and fittings for any leaks using leak detector fluid (such as soapy water).

3.2.8 Refrigerant Oil Charge

CAUTION

- **For the initial charge, always use new oil not exposed to air.**
- **When adding refrigerant oil, make sure that no air or water enters the unit.**
- **Store the refrigerant oil in a sealed container placed indoors.**

3.2.8.1 Initial Charge of Refrigerant Oil

At initial test operation or after periodical inspection, the compressor's moving parts such as bearings and seals may not have sufficient lubrication. Therefore, charge the compressor with refrigerant oil according to the following procedure.

1. Thoroughly vacuum the compressor and oil separator to 40 Torr. Make sure that the unloader and variable Vi solenoid valves are opened to vacuum the cylinders.
2. Close the oil separator outlet valve in the oil supply line. Also close the oil injection regulating valve.
3. Charge refrigerant oil from the drain valve on the oil cooler (or on the oil filter) through the compressor to the oil separator.
4. When the oil level reaches to the lower limit of the oil level gauge in the oil separator, stop the charging from the oil supply line. (The approximate amount of refrigerant oil charge is the combined capacity of the oil cooler and oil filter plus at least 20L).
5. Then charge oil to the specified level from the oil charging valve on oil separator.
6. Start the oil pump and check the oil pump discharge pressure to confirm that the refrigerant oil flows. Check if the oil level on the oil separator lowers.
7. Adjust the differential pressure between the oil pump discharge and the suction pressure. (Specified differential pressure: 0.2±0.05 MPa)
8. After adjusting the differential pressure, run the oil pump for 2 minutes. After checking that the motor main power is off, turn the compressor driving shaft manually. About 10 turns using a coupling.
9. If refrigerant oil flows through the oil supply line normally after the above works, the initial refrigerant oil charge is completed.

【POINT】

- After the initial charge of refrigerant oil, make sure that the oil cooler and oil filter are filled with refrigerant oil.
- For refrigerant oil to be used, refer to "4.1 Refrigerant Oil".
- For the amount of initial refrigerant oil charge, refer to the package operation manual.

Bowman Refrigeration 206-706-3033

3.2.8.2 Additional Charge of Refrigerant Oil Procedure

For additional charge of refrigerant oil after refrigerant charge and operation of the compressor, follow the procedure below.

1. Lower the compressor suction pressure below the atmospheric pressure. Adjust the controller set value of low suction pressure protection to a lower value while monitoring the suction pressure.
2. From the service valve (for refrigerant oil charging) in the suction pipe, charge refrigerant oil.
3. After confirming that the oil level in the oil separator has reached specified level, complete the oil charge.
4. Restore the controller set value of low suction pressure protection.

CAUTION

- **For additional refrigerant oil charge, always use the same brand of oil with the same viscosity grade as that already charged in the package. The use of any other brand or viscosity grade may cause operation problems.**

3.2.9 Charging of Refrigerant

As with the refrigerant oil charge, charging of the refrigerant must be performed carefully so that no moisture or air enters the system.

For further details on refrigerant charging works, refer to the package or unit operation manual.

3.2.10 Check after Installation

Perform the checks after compressor installation according to the check list in the package operation manual.

Bowman Refrigeration 206-706-3033

3.3 Documents Related to Installation

■ Weight and Dimensions (Compressor only)

Refer to "2.2 Compressor Specifications".

■ Lifting Positions/Gravity Center Positions/Lifted View

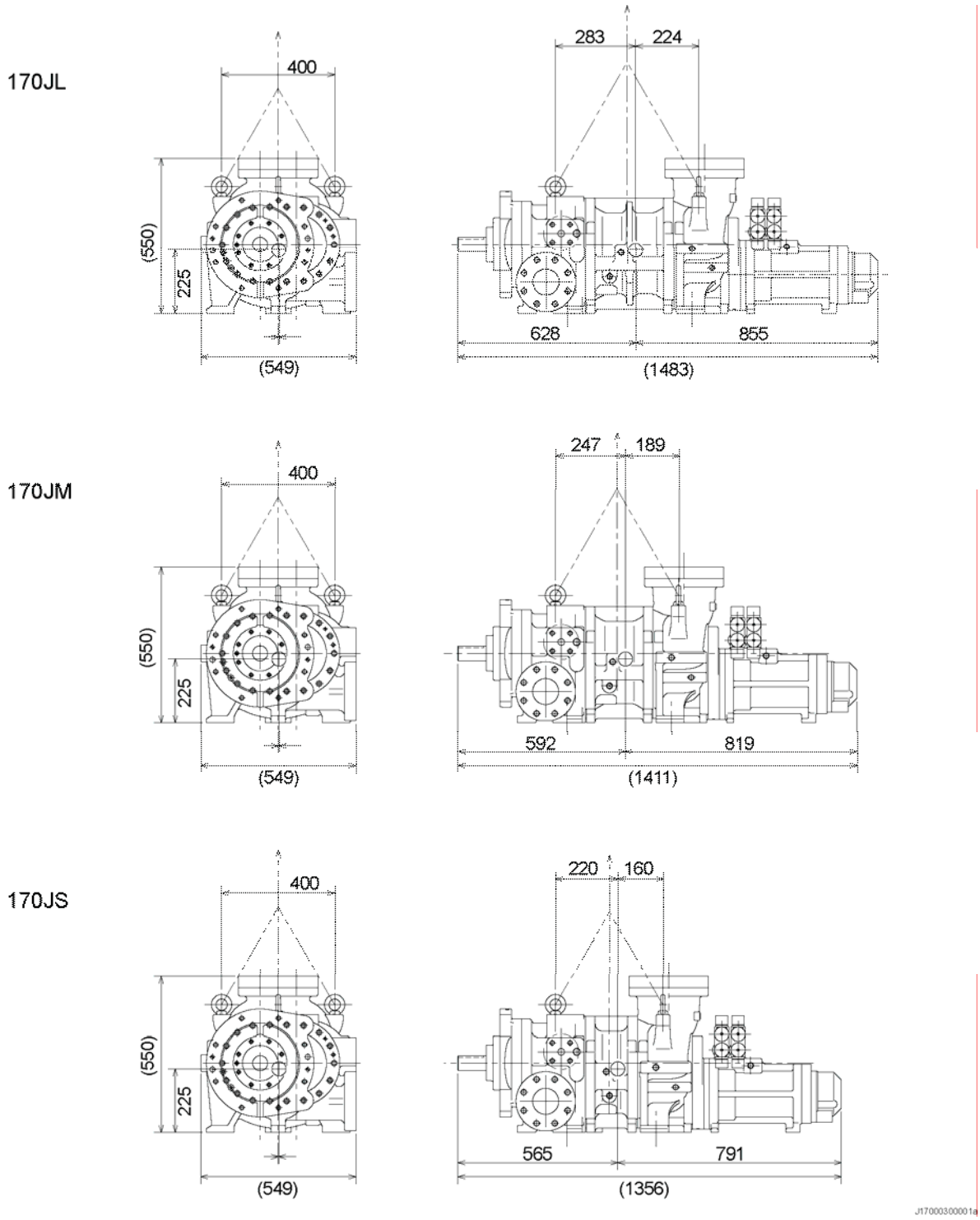

Figure 3-5 Center of Gravity and Lifting Points

Bowman Refrigeration 206-706-3033

Figure 3-6 Compressor being Lifted

Bowman Refrigeration 206-706-3033

4 Compressor and Package Operation

4.1 Adjustment before Test Operation

The unloader slide valve and variable Vi valve must be set by the controller before test operation.

4.1.1 Adjustment of Unloader Slide Valve and Variable Vi Valve

Before test operation, make sure to perform a set-up that allows the controller to learn unloader slide valve positions from the 0% to 100% and variable Vi valve positions from the 2.5 to 5.0.

The unloader slide valve is set to the 0% position before compressor delivery.

CAUTION

- **During the setup, make sure to operate the oil pump only. Turn off the main power for the compressor motor.**
- **After the initial adjustment for unloader slide valve and variable Vi valve, always open the oil supply valve to the bearing valve in the oil pump line. If the oil supply valve to the bearing is left closed, oil will not be supplied to the compressor before starting, causing damage to the bearing or other parts.**
- **After the setup operation, equalize pressure by opening the suction stop valve slowly in the package. After opening the suction stop valve, make sure that the motor main power is off and then turn the compressor driving shaft manually.**

1. Close the valve of the oil supply to the bearing in the oil pump line.
2. Close the suction stop valve of the package.
3. To check the unloader solenoid valve operation, start the oil pump and adjust the pressure. Set the oil pump discharge pressure 0.2 MPa (+/-0.05 MPa) higher than the suction pressure.
4. Using the controller manually, press the increase button of the unloader solenoid valve to increase the load of the unloader slide valve and check if the indicator needle moves toward the 100% point.
5. If the indicator needle moves in the increasing direction, the solenoid valve wiring is correct.
6. If the indicator needle moves reversely or does not move, check the solenoid valve wiring.
7. Next, operate the variable Vi solenoid valve to the L-Port position using the controller and check the variable Vi valve moving direction on the controller display.
8. If the variable Vi valve moves to the L-Port direction, the variable Vi solenoid valve wiring is correct. If it does not move or moves in the reverse direction, check the wiring.
9. If the unloader slide valve and variable Vi valve move in the correct directions respectively, execute the initial set up mode for the unloader slide valve and the variable Vi valve by the controller.
10. The oil pump automatically starts and the unloader slide valve and variable Vi valve automatically move in increasing direction and decreasing directions to allow operational position check.
11. After the initial set up of the unloader slide valve and the variable Vi valve are completed, close the valve of the oil supply to the bearing in the oil pump line.

With these steps, the initial adjustment for the unloader slide valve and the variable Vi valve is completed.

Bowman Refrigeration 206-706-3033

4.2 Refrigerant Oil (Lubricant)

The selection and management of refrigerant oil (lubricant) has a significant influence to the compressor performance

When selecting and managing refrigerant oil, take the following points into consideration

4.2.1 Precautions for Selecting the Refrigerant Oil

- The refrigerant oil must be selected while considering the refrigerant in use, type of evaporator, and operation conditions. Various properties of refrigerant oil must be checked such as solubility with the refrigerant, separability, fluidity at low temperature and thermal stability at high temperature as well as viscosity. We therefore recommend consulting our sales office or Mayekawa agency for choice of a specified brand for your system.
- The refrigerant oil supplied to the compressor must have appropriate viscosity to lubricate bearings and other mechanical components properly. The refrigerant oil viscosity must be measured at the oil supply port of the compressor. The viscosity of refrigerant oil is significantly affected by the type of refrigerant and oil. If the refrigerant dissolves in oil (the oil is miscible), the actual viscosity may be substantially lower than the required viscosity for the compressor depending on the operation conditions. If the refrigerant does not dissolve in the oil (the oil is not miscible) and the oil temperature is low, the viscosity may become excessively high. The refrigerant oil must be selected such that it is supplied to the compressor with appropriate viscosity (13 to 40cSt) in the operating conditions.
- In a system utilizing a screw compressor, the refrigerant oil supplied to the compressor is discharged along with the gas and separated from the refrigerant gas by the oil separator. However, the oil separator cannot separate all the oil from refrigerant gas and a small quantity of the refrigerant oil goes to the condenser. AS a results oil also enters the evaporator. Because of the wide operation temperature range of the refrigerant oil, it must have thermal stability at high temperatures, good fluidity at low temperatures as well as high separable performance from refrigerant gas in the oil separator.
- Depending on the refrigerant in use, some refrigerant oils cannot be used. For example, polyolester (POE) cannot be used with anmonia refrigerant.

4.2.2 Recommended Refrigerant Oil

When selecting refrigerant oil, not only the refrigerant but also O-rings in use must be considered. We therefore recommend using the following brands of refrigerant oil for the 170J-series compressors to prevent any operating problems.

■ Recommended Refrigerant Oil for Ammonia Refrigerant

(1) Polyalkylene glycol synthetic oil (PAG): Miscible oil

Brand	VG	Manufacturer	Type
Freol PN46	46	JOMO	PAG

The only miscible oil for anmonia refrigerant is PN46.

(2) Naphthenic base or paraffinic base mineral oil: Non-micible oil

Brand	VG	Manufacturer	Type
SUNISO 3GS	32	Sunoco INC.	Naphthenic base mineral oil
REFOIL NS 3GS	32	Nippon Oil Corporation	
GARGOYLE ARCTIC C HEAVY	46	Exxon Mobil	
CLAVUS 46	46	Shell	
CAPELLA WF46	46	Texaco	
CP-1009-32	32	CPI	Paraffinic semi-synthetic oil
REFLO 46A	46	Petro Canada	
CAPELLA PREMIUM	68	Texaco	
RHT-68	68	Kluber	
CLAVUS S68	68	Shell	Paraffinic semi-synthetic oil Group II
REFLO XL	68	Petro Canada	

Bowman Refrigeration 206-706-3033

(3) Alkylbenzene (AB): Non-miscible synthetic oil

Brand	VG	Manufacturer	Type
GARGOYLE ARCTIC SHC425	46	ExxonMobil	AB synthetic oil
CLAVUS AB46	46	Shell	
BERREL FREEZE 46S	46	Matsumura Oil	
CP-4700-32	32	CPI	
MYCOLD AB46	46	Mayekawa	
GARGOYLE ARCTIC SHC326	68	ExxonMobil	PAO and AB synthetic oil
REFLO SYNTHETIC 68A	68	Petro Canada	

PAO : Polyalphaolefin

■ Refrigerant oil for HFC refrigerants

(1) Polyolester synthetic oil (POE) for R404A, R507A, R410A: Miscible synthetic oil

Brand	VG	Manufacturer	Type
SUNICE T-68	68	Sunoco INC.	POE
EMKARATE RL68H	68	Lubrizol	

(2) Polyolester synthetic oil (POE) for R134a: Miscible synthetic oil

Brand	VG	Manufacturer	Type
Freol α100	100	JOMO	POE

CAUTION

- **The refrigerant oils listed above are adaptable to the 170J-series. We do not recommend using any of them with our other compressors.**

To use any other brand of refrigerant oil not listed above, please contact us.

We do not recommend using polyalphaolefin (PAO) oil for anmonia refrigerant. If it is necessary, please contact us. Compressor specifications must be modified.

4.2.3 Change of Refrigerant Oil Brand

When changing the brand of refrigerant oil in use, attention must be paid to the following points.

CAUTION

- **The change of refrigerant oil brand may cause problems in operating conditions and the compressor. When changing the refrigerant oil brand in use, make sure to contact us because appropriate steps must be surely followed.**

- Refrigerant oil may contain additives for the purpose of improving lubricating ability and preventing deterioration. The kinds of additives and the additive rate differ depending on the type and brand of refrigerant oil. Therefore, we recommend avoiding the mixed use of different brands of refrigerant oil. If mixed brands of refrigerant oil are used, the different additives in the refrigerant oils may react with each other and cause problems of creating foreign substances.
- If it is necessary to change the brand of refrigerant oil, recover as much oil as possible from the compressor as well as the oil separator, oil cooler, condenser, evaporator and other package and plant components before charging the new refrigerant oil brands.
- When changing brands of refrigerant oils, always confirm advice of change from the refrigerant oil manufacturer. Particularly when changing the brand to a different manufacturer, consult both manufacturers to verify that the brand change will not cause problems.
- When changing the refrigerant oil to another product of the same brand at a different viscosity grade, confirm that the viscosity grade will not cause problems during operation of the compressor.

Bowman Refrigeration 206-706-3033

- Depending on the characteristics of refrigerant oil (miscible or non-miscible), the refrigeration system must adopt different package components and refrigeration flow (e.g. type of evaporator, with or without oil return line). Therefore, miscible refrigerant oil must not be changed to non-miscible refrigerant oil. If you change the refrigerant oil from non-miscible to miscible, select the refrigerant oil paying particular attention to the viscosity. The actual refrigerant oil viscosity supplied to the compressor will lower because the refrigerant dissolves in the refrigerant oil.

4.2.4 Precautions for Handling Refrigerant Oil

- For refrigerant oil charging, always use clean oil that has been sealed and stored indoors. Any oil left open to air may absorb moisture and contain dust or foreign substances.
- When charging refrigerant oil, take extreme care not to allow entry of air and moisture.

4.2.4.1 Precautions for Handling Polyalkylene Glycol (PN46)

PN46 is much more hygroscopic than mineral oils and any moisture mixed in the oil may lead to rust, corrosion and wear within the package. When handling Freol PN46, pay special attention to the following points.

- Do not perform oil charging in rainy weather or at a place with high humidity to prevent absorbing moisture.
- Before charging, remove as much moisture as possible from the system by exhausting it with a vacuum pump for a sufficient length of time and leaving the system in vacuum condition overnight.
- Do not open the lid of bale can until just before charging. Once the can is opened, finish the oil charge as quickly as possible. (Finish the charge of a single can of oil within 15 minutes.)
- Cover any gaps between the bale can opening and the charge hose so that foreign substances or moisture cannot enter. A more effective way is to substitute any space inside the bale can with nitrogen gas .
- Always charge all oil from the bale can. Even if some oil remains, do not use it subsequently.
- If any oil drops on a painted surface, wipe it away as soon as possible. Otherwise the paint may come off.

4.2.4.2 Precautions for Handling Polyolester (POE) Oil

This type of oil has high hygroscopicity as polyalkylene glycol, and also exhibits hydrolyzability under high temperature environments. Moisture entry must be avoided. Therefore, special attention must be paid as with PAG when handling POE.

- Finish the charging in as short a time as possible after opening the bale can to minimize exposure to air.
- Make sure that all oil in a bale can is used in a single charging. Any remaining oil must be stored indoors with the can lid closed tightly. Do not attempt to store it for a long time.
- Because POE can hydrolyze, make sure to perform an oil analysis regularly in the package to see if any abnormal conditions are present.

Bowman Refrigeration 206-706-3033

4.3 Precautions for Operation

4.3.1 Prevention of Liquid Return Operation

Liquid return is a phenomenon where refrigerant liquid (mist) is not completely evaporated within the evaporator and is drawn into the compressor.

Liquid return may cause abnormal vibrations and noises from compressor, foaming of refrigerant oil in the oil separator (too much entry of oil), and poor lubrication of compressor.

To prevent liquid return, appropriately adjust the expansion valve to the evaporator or liquid cooler. In addition, special attention must be paid to the suction pipe line connection way to the system and means of starting up the compressor after a long time of stoppage.

4.3.2 Purging of Non-condensable Gases

Any non-condensable gas in the system may cause the compressor discharge pressure to rise higher than the refrigerant saturation pressure that depends on cooling water temperature of condenser. This is caused by the non-condensable gas staying in the condenser which deteriorates the heat exchange performance.

If the vacuum pumping performed upon initial installation or maintenance is insufficient or the suction pressure is lower than the atmospheric pressure to suck air if the suction pipe had a leak, non-condensable gases accumulate in the condenser.

When a considerable amount of non-condensable gases accumulate in the condenser, the compressor load increases and finally the motor overcurrent alarm may occur.

In such a case, purge any non-condensable gas from the condenser.

WARNING

- **Some types of refrigerants may have bad smell, toxicity, and/or flammability.
  In a airtight space such as a machine room, oxygen shortage may occur due to high concentration of the refrigerant gas.
  Maintain sufficient ventilation while working.**
- **When handling fluorocarbon refrigerants, remember that they are prohibited from being purged into air by law.**

1. When the compressor is stopped, allow the cooling water to flow to the condenser and check that there is no difference in water temperature between the inlet and outlet. If any difference is present between the inlet and outlet water temperatures, keep the cooling water flowing until the temperature difference is eliminated.
2. Measure the pressure of the condenser and compare it with the refrigerant saturation pressure depending on the cooling water temperature.
3. If the condenser pressure is higher than the refrigerant saturation pressure by 0.05 MPa or more, purge any non-condensable gases.

Bowman Refrigeration 206-706-3033

4.3.3 Action for Stopping the Compressor for Long Period of Time

Before stopping the compressor for a long time, make sure to perform the following steps.

- Turn off the main motor power.
- Turn off the oil heater power and the control power.
- Close the suction stop valve and discharge stop valve.
- If an economizer or liquid injection is used, close the stop valve located at the compressor inlet.

If the stoppage period is 1 month or longer, perform the following checks every month.

- Measure the package pressure.
- Check for refrigerant leak using a leakage detector.
- Operate the oil pump for 5 minutes. After that, turn the compressor driving shaft manually. (10 turns or more)

When restarting the compressor after a stoppage period of 1 year or longer, check the package for refrigerant leakage and replace the refrigerant oil. Also check the main motor for insulation resistance.

Supply power to the oil heater for at least 1 hour before operation starts. And before starting the operation, confirm that the refrigerant is not condensed in the package by checking the package temperature and pressure (especially the suction pipe).

Bowman Refrigeration 206-706-3033

5 Maintenance and Inspection

5.1 Precautions for Maintenance and Inspection

- Before starting maintenance/inspection work after completely removing the refrigerant from the package, make sure that the main motor, control and power for instruments and valves are turned off and the power off switches are protected from any unauthorized access. In addition, attach a tag to each power off switch informing other workers that the switch must not be turned on. (Lockout/tagout)
- Also when a manual valve is closed, apply appropriate measures so that it cannot be operated by other workers and attach a tag stating that the device must not be opened.
- Before disassembling, inspecting or handling the compressor, fully understand the disassembly/assembly procedure of the compressor. This document does not provide the complete procedures of compressor disassembly and assembly but just instructs the main points in compressor service.
- If you need to perform the complete compressor disassembly/assembly work, consult MAYEKAWA in your region.
- When replacing any parts with the compressor, always use the MAYEKAWA genuine parts. If any unauthentic part is used, unexpected problems may occur.
- To disassemble the compressor, it must be removed from the package and placed on a work bench. Before removing the compressor from the package, make sure to remove the refrigerant in the package and confirm that the pressure inside the compressor is atmospheric.
- Prior to removing the compressor from the package, check that the high temperature side (discharge side) is cooled down to 40°C or less.
- Perform the compressor disassembly on a rigid and flat work bench.
- When removing the compressor from the package and placing it on the work bench, follow the instructions in Chapter 3, "3.1 Precautions for Installation" and "3.2.3 Transfer".
- Lifting and carrying works for the compressor and package must be performed by a qualified person.
- For compressor disassembly/assembly, use specified tools that are properly functioning.
- When handling heavy parts, exercise extreme caution and use safe auxiliary tools such as safety bolts.
- When carrying a heavy part, use lifting equipment such as crane, or work with one or more workers.
- Before working with other workers, make sure that all workers clearly understand the work procedure.
- When turning on and off the power supplies, take care to avoid any electric shock hazard.
- Any electric works requiring some expert qualifications must be performed by a qualified person.

Bowman Refrigeration 206-706-3033

5.2 Maintenance List

5.2.1 Daily Management

The controller panel installed to the compressor package in standard displays the following items that monitor the compressor operating conditions.

- Suction pressure (MPaG)
- Discharge pressure (MPaG)
- Lubrication pressure (MPaG)
- Oil filter pressure loss (MPaG)
- Suction temperature (°C)
- Discharge temperature (°C)
- Oil supply temperature (°C)
- Motor current (A)
- Specified load for unloader (%)
- Compressor Vi setting (-)
- Suction superheat (°C)
- Discharge superheat (°C)

These operation data should be recorded in an operating log book on a daily basis. This practice is significantly effective and helpful in finding out any abnormal condition of the compressor and prevents possible compressor failures.

In particular, it is important to confirm the absence of any abnormality between the temperature/pressure correlations related to the refrigerant evaporation and condensation. It is possible to find any abnormal condition in the compressor or the system quickly by monitoring the evaporation and condensation temperature and pressure.

If any compressor/system failure or operating accident occurs, the operating log book will help the cause to be clear and take appropriate measures promptly.

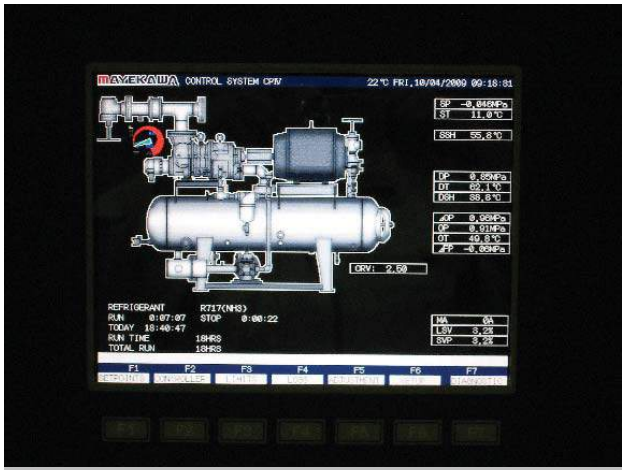

Figure 5-1 Controller Display Screen

Bowman Refrigeration 206-706-3033

■ Daily inspection item

Based on the operating log, check the following points.

Table 5-1 Daily Inspection Item

Inspection Items		Inspection Contents	Check Items/ Countermeasures
Compressor	Operation time (h)	Total operation time (h)	• Judgment of periodic maintenance timing
	Suction pressure (MPaG)	Difference from setting of saturated pressure depend on evaporation temperature	• Contamination of cooling pipe surfaces • Coolant flow rate
	Discharge pressure (MPaG)	Difference from condensation pressure depend on cooling water temperature	• Contamination of condenser cooling pipes • Non-condensable Gases in condenser • Cooling water amount, cooling water temperature
	Oil supply pressure (MPaG)	Differential pressure from discharge pressure	• Any increasing trend in differential pressure • Clogged oil filter
	Suction temperature (°C)	Whether it is within the range of upper and lower limit	• Coolant Flow rate
	Suction superheat (°C)	Whether superheat is appropriate	• Adjust expansion valve. • Insufficient refrigerant charge
	Discharge temperature (°C)	Whether it does not exceed upper limit	• Non-condensable Gases in condenser • Oil supply temperature, insufficient oil supply • Compressor failure
	Oil supply temperature (°C)	Whether it is within the range of upper and lower limit	• Contamination of oil cooler pipes
	Specified load for unloader (%)	Whether it operates normally	• Damaged solenoid valve coil • Inappropriate adjustment opening of RV valve on solenoid valve assembly
	Leak from mechanical seal	Leak rate per a hour	• Mechanical seal failure
	Variable Vi slide valve position (L, M, H)	Whether port position is appropriate for operating conditions	• Damaged solenoid valve coil • Position sensor failure
	Vibrations and noises	Abnormal noises, abnormal vibrations	• Compressor failure
Miscellaneous	Motor current (A)	Whether it is larger than that checked during test operating	• Compressor failure
	Oil level of oil separator	Oil level	• Oil entry • Add oil
	Refrigerant level in the receiver	Refrigerant level	• Check for refrigerant leak • Charge refrigerant

■ Daily maintenance items

1. Refrigerant oil level

If the refrigerant oil level in the oil separator reaches the lower limit, charge refrigerant oil.

(Refer to "3.2.8 Refrigerant Oil Charge".)

2. Replacing Oil Filter

If the differential pressure between oil supply pressure and discharge pressure increases to or above 0.15 MPa, replace the oil filter element.

In an initial period of operation, the oil filter differential pressure may increase in a short time.

Bowman Refrigeration 206-706-3033

CAUTION

- **With some operating conditions, any oil supply differential pressure (Discharge pressure – Oil supply pressure) exceeding over 0.15 MPa may significantly decrease the thrust bearing life. Moreover, the oil filter element may be broken, resulting in compressor damage.**

3. Cleaning Suction Strainer

When the compressor operating hours have exceeded 500 h, inspect the suction strainer and remove the temporary filter for an initial period of operation if it is attached.

At the beginning of operation or just after the periodical maintenance, the differential pressure of the suction strainer may increase in a short time. If the differential pressure increases, inspect and clean the suction filter.

4. Oil Leak from Mechanical Seal

If there is a lot of oil leak from the mechanical seal, confirm the quantity of the leak per a hour. The table below specifies the allowable leak rate and the upper limit for inspection.

If any damage is found in the mechanical seal during inspection, replace the mechanical seal.

Table 5-2 Guideline for Leak Rate from Mechanical Seal

Model	170JL/170JM/170JS
Allowable leak rate (ml/h)	≤ 3
Upper limit for replacement (ml/h)	> 9

Note: The specifications above are just guidelines.
They are not guaranteed value.

5. Contamination of Condenser and Oil Cooler Pipes

The degree of clogging and contamination of the cooling pipes of the cooling water side is mostly affected by the cooling water quality.

If the oil temperature and discharge pressure increase gradually in an initial period of operation, inspect and clean the cooling water side of the oil cooler and condenser even when the inspection time has not come.

Bowman Refrigeration 206-706-3033

■ Periodic inspection

Inspect the following points at specified intervals.

Table 5-3 Periodic Inspection Items

Item	Inspection Interval	Remarks
Pressure sensor	Annually	
Thermometer	Annually	
Suction strainer	Inspect 500 operating hours after start	If the differential pressure suction strainer increases, inspect and clean the suction strainer.
	Inspect and clean annually.	
Refrigerant oil	Replace 500 operating hours after start	
	Analyze refrigerant oil at intervals of 6 months.	If the analysis results do not satisfy the management standards in "5.4 Refrigerant Oil Management", replace the refrigerant oil.
	Replace annually	
Oil filter	Replace annually	If the differential pressure between the oil supply and discharge pressure exceeds 0.15 MPa, replace the oil filter.
Cooling water side of oil cooler	Annually	Clean it if it is confirmed to be contaminated heavily.
Cooling water side of condenser	Annually	Clean it if it is confirmed to be contaminated heavily.
Mechanical seal	Annually or every 8,000 operating hours *	To be replaced if there is any damage
Coupling	Annually or every 8,000 operating hours *	

*Note: Inspect 1 year after delivery or after the specified operating hours, whichever comes first.

Bowman Refrigeration 206-706-3033

5.2.2 Compressor Overhaul

When servicing or overhauling the compressor, follow the instructions and guidelines described below.

The compressor inspection interval significantly differs depending on the operating conditions, refrigerant in use, type and condition of refrigerant oil, and the system in which the compressor is operated. The table below indicates the overhaul interval recommended by MAYEKAWA based on the operating conditions of the compressor.

Table 5-4 Inspection Interval Guidelines According to the Operating Condition for a Standard System

Operating Condition	Example of Application	Recommended Inspection Interval
Relatively stable	Clod storage and Rerfrigeration	Every 5 years or 40,000 operating hours
Frequent load change, start and stop	Freezer, heat pump	Every 4 years or 30,000 operating hours
Higher reliability	Chemical process cooling	Every 3 years or 20,000 operating hours
Special operation condition such as high suction pressure	Special application	Every 2 years or 15,000 operating hours

Note 1: The above guidelines are applied only when the compressor is operated within the operation limits. Refer to “2.3 Operation Limits”.

Note 2: The above guidelines are applied only when the compressor undergoes daily inspections and periodic inspections. Refer to “5.2.1 Daily Management”.

Note 3: Inspect the compressor in the specified period after delivery or by the specified operating hours, whichever comes first.

Note 4: The above guidelines do not constitute any guarantee in terms of service life.

Table 5-5 Overhaul Timings and Replacement Parts

Part No.	Part Name	Qty.	Inspection Interval		Remarks
			40,000 hours or 5 years	80,000 hours or 10 years	
			30,000 hours or 4 years	60,000 hours or 8 years	
			20,000 hours or 3 years	40,000 hours or 6 years	
93	Suction flange gasket	1	○	○	ANSI#300 5”
96	Discharge flange gasket	1	○	○	ANSI#300 3”
6	O-ring	1	○	○	JIS B 2401 P375
9-1	O-ring	1	○	○	JIS B 2401 P52
12	O-ring	1	○	○	JIS B 2401 P375
17-1	O-ring	1	○	○	JIS B 2401 P300
17-2	O-ring	1	○	○	JIS B 2401 P14
23	O-ring	2	○	○	JIS B 2401 G115
35-1	O-ring	1	○	○	JIS B 2401 G90
35-2	O-ring	1	○	○	JIS B 2401 G115
49	O-ring	1	○	○	JIS B 2401 G120
52-1	O-ring	1	○	○	JIS B 2401 G120
52-2	O-ring	1	○	○	JIS B 2401 G145
63-1	O-ring	2	○	○	JIS W 1516 WG36
63-2	O-ring	2	○	○	JIS B 2401 P14
65	O-ring	2	○	○	JIS B 2401 P130
73	O-ring	1	○	○	JIS B 2401 P32
75-1	O-ring	1	○	○	JIS B 2401 G135
75-2	O-ring	1	○	○	JIS B 2401 P14

Bowman Refrigeration 206-706-3033

Part No.	Part Name	Qty.	Inspection Interval		Remarks
			40,000 hours or 5 years	80,000 hours or 10 years	
			30,000 hours or 4 years	60,000 hours or 8 years	
			20,000 hours or 3 years	40,000 hours or 6 years	
82-1	O-ring	2	○	○	JIS B 2401 P10A
82-2	O-ring	1	○	○	JIS B 2401 P16
295	O-ring	1	○	○	JIS B 2401 P52
298	O-ring	1	○	○	JIS B 2401 G135
299-1	O-ring	1	○	○	JIS B 2401 G100
299-2	O-ring	1	○	○	JIS W 1516 WG36
325-1	O-ring	3	○	○	JIS B 2401 P32
421	O-ring	2	○	○	JIS B 2401 P32
432	O-ring	4	○	○	JIS B 2401 G100
433	O-ring	4	○	○	JIS B 2401 G75
494	O-ring	1	○	○	JIS B 2401 P155
561	O-ring	8	○	○	JIS B 2401 P12
657	O-ring	1	○	○	JIS B 2401 G100
713	O-ring	1	○	○	JIS B 2401 P12
714	O-ring	1	○	○	JIS B 2401 P6
717	O-ring	1	○	○	JIS B 2401 G25
9-2	Back-up ring for O-ring	2	○	○	SUN-2BP 52
325-2	Back-up ring for O-ring	2	○	○	SUN-2BP 32
66	Teflon cap seal	2	○	○	SUNR-BE-130
50	Oil seal	1	○	○	SA1J 65 85 12
100	Mechanical seal assembly	1	○	○	
38-1	Thrust bearing assembly, male rotor	1	○	○	7312BEAXT7DF
38-2	Thrust bearing assembly, female rotor	1	○	○	7309BEAXT7DF
40-1	Lock washer	1	○	○	AW12
40-2	Lock washer	1	○	○	AW09
46	Spring lock washer	12	○	○	Hexagon socket head cap screw M8
237-1	Torsional slip washer	1	○	○	
237-2	Torsional slip washer	1	○	○	
293	Spiral retaining ring	2	○	○	FRSN-45
489	Valve sheet	1	○	○	
485	Spring, check valve	1	○	○	
711	Spring	1	○	○	
27	Bearing for male rotor	2	○	○	Reusable if not damaged.
28	Bearing for female rotor	2	○	○	Reusable if not damaged.
481	Check valve slider	1	○	○	Reusable if not damaged.
486	Locknut	1	○	○	FU nut FU04SS Reusable if not damaged.
487	Plain washer	1	○	○	JIS B 1256, small dia. M20 Reusable if not damaged..

Bowman Refrigeration 206-706-3033

Part No.	Part Name	Qty.	Inspection Interval		Remarks
			40,000 hours or 5 years	80,000 hours or 10 years	
			30,000 hours or 4 years	60,000 hours or 8 years	
			20,000 hours or 3 years	40,000 hours or 6 years	
491	Check valve stem	1	○	○	Reusable if not damaged..
528	Sleeve, oil seal	1	○	○	Reusable if not damaged..
712	Vi position sensor rod	1	○	○	Reusable if not damaged..
30	Balance piston	1		○	To be replaced if there is any damage
33	Sleeve, balance piston	1		○	To be replaced if there is any damage
29-1	Retaining ring	2		○	JIS B 2804 H120 To be replaced if there is any damage
29-2	Retaining ring	2		○	JIS B 2804 H95 To be replaced if there is any damage
32	Retaining ring	1		○	JIS B 2804 S40 To be replaced if there is any damage
37	Retaining ring	1		○	JIS B 2804 H120 To be replaced if there is any damage
79	Retaining ring	1		○	JISB2804 S10 To be replaced if there is any damage
716	Retaining ring	1		○	JIS B2804 E snap ring 4 To be replaced if there is any damage
78	Ball bearing	1		○	To be replaced if there is any damage
39-1	Locknut	1		○	AN12 To be replaced if there is any damage
39-2	Locknut	1		○	AN09 To be replaced if there is any damage
69	Locknut	1		○	FU nut FU05SS To be replaced if there is any damage
25	Male rotor	1			To be replaced if there is any damage
26	Female rotor	1			To be replaced if there is any damage
41-1	Bearing spacer, male rotor	1			To be replaced if there is any damage
41-2	Bearing spacer, female rotor	1			To be replaced if there is any damage
42-1	Spacer, thrust bearing alignment male rotor	1			To be replaced if there is any damage
42-2	Spacer, thrust bearing alignment female rotor	1			To be replaced if there is any damage

Bowman Refrigeration 206-706-3033

Part No.	Part Name	Qty.	Inspection Interval		Remarks
			40,000 hours or 5 years	80,000 hours or 10 years	
			30,000 hours or 4 years	60,000 hours or 8 years	
			20,000 hours or 3 years	40,000 hours or 6 years	
250-1	Thrust washer, male rotor	1			To be replaced if there is any damage
250-2	Thrust washer, female rotor	1			To be replaced if there is any damage
31	Key for balance piston	1			To be replaced if there is any damage
91	Shaft key	1			To be replaced if there is any damage
725	Packing, Vi position sensor box	1			To be replaced if there is any damage

Note:

Reusable if not damaged: If there is no damage or abnormality in visual inspection, the part can be used continuously.

To be replaced if there is any damage: Replace the part if any damage or abnormality is found in visual inspection.

Bowman Refrigeration 206-706-3033

5.3 Management of Refrigerant Oil

5.3.1 Refrigerant Oil Management Standard

The refrigerant oil, to which the management standard is applied, is classified as follows:

(1) Synthetic oil: Polyalkylene Glycol (PAG)

(2) Mineral oil: Naphthenic base, Paraffinic base
Synthetic oil: Alkyl benzene (AB), Polyalphaolefin (PAO)

(3) Synthetic oil: Polyolester (POE)

- We recommend analyzing oil by sampling at intervals of 6 months.
- If the oil does not satisfy the management standards below, replace the oil. (This does not apply to water contents in PAG oil)

The evaluation items and standards are as follows. The management standards may be changed without notice.

Table 5-6 Synthetic oil (PAG)

Item	Management Standards
(a) Color	ASTM color standard: 4.0 or less
(b) Total acid number	0.1 mg•KOH/g or less
(c) Kinematic viscosity	Amount of change must be within ±10% from that of the new oil.
(d) Water content	2000 [ppm] or less Note 1
(e) Contamination level	Contamination measured by gravimetric analysis (millipore filter value) is 15 mg/100 ml or less. Note2

Table 5-7 Mineral oil, synthetic oil (AB, PAO)

Item	Management Standards
(a) Color	ASTM color standard: 6.0 or less
(b) Total acid number	0.3 mg•KOH/g or less
(c) Kinematic viscosity	Amount of change must be within ±15% from that of the new oil.
(d) Water content	100 [ppm] or less Note 1
(e) Contamination level	Contamination measured by gravimetric analysis (millipore filter value) is 15 mg/100 ml or less. Note 2

Table 5-8 Synthetic Oil (POE)

Item	Management Standards
(a) Color	ASTM color standard: 4.0 or less
(b) Total acid number	0.2 mg•KOH/g or less
(c) Kinematic viscosity	Amount of change must be within ±10% relative to the new oil.
(d) Water content	200 ppm or less
(e) Contamination level	Contamination measured by gravimetric analysis (millipore filter value) is 15 mg/100 ml or less. Note 2

Note 1: Refrigerant oil miscible with ammonia has high hygroscopicity and may contain water during sampling. In addition, ammonia dissolved in the refrigerant oil may be detected as water when it is analyzed, thereby preventing correct measurement of water content. Therefore, the management standards above should be construed as guidelines.

Note 2: This assumes that an oil filter with a nominal filtration rating of 15 μm or less is used.

Bowman Refrigeration 206-706-3033

5.3.2 Replacement Interval for Refrigerant Oil

■ First system startup

When the system is started up for the first time, the refrigerant oil may get contaminated or deteriorate due to scale inside the piping and vessels. For the first system start up, replace the refrigerant oil 500 hours after operation.

■ During normal operation

Refrigerant oil gradually degrades when used for a long term. Though, the degradation rate differs depending on the operating conditions, oil type, and any foreign substances or water in the oil, the recommended replacement interval is every 5,000 operation hours or 1 year, whichever comes first. However, if the oil filter is clogging frequently or the oil becomes turbid in black and opaque, replace the oil after confirming and eliminating the cause.

Bowman Refrigeration 206-706-3033

5.4 Disassembly and Assembly of the Compressor

5.4.1 Preparation for Disassembly

1. Turn off the main motor power.
2. Close the suction stop valve, discharge stop valve, and liquid supply stop valve.
3. Perform refrigerant disposed from the compressor. Maintain sufficient ventilation when working.
4. Open the capacity control solenoid valve and variable Vi solenoid valve manually, and dispose oil and refrigerant inside the cylinder.
5. Turn off the control power.
6. Disconnect the Vi position sensor connector.
7. Remove the coils from the capacity control solenoid valve and variable Vi solenoid valve.

WARNING

- **After turning off the motor main power, control power, and power for the other equipments, always perform lockout/tagout to prevent any inadvertent operation to turn on the equipment.**
- **After closing the suction stop valve, discharge stop valve, and liquid supply stop valve, always perform lockout/tagout to prevent any inadvertent opening of these valves.**
- **Lockout/tagout must always be performed by the person working on the equipment.**
- **After confirming that all work is complete, the person who applied lockout/tagout must be the one to release them.**
- **If there is residual high-pressure gas/refrigerant or oil dissolved in the refrigerant, the gas and oil may blow off when closed valves (components) are opened. This may result in injury such as frostbite and loss of vision. Always check and confirm the pressure in the compressor, before opening any pipe connections and valves.**

8. Disconnect the pipe connections and remove the lug bolts from the compressor base.
9. Pull out the parallel pin between motor spacer and compressor, and remove the bolts.
10. Using lifting equipment, remove the compressor from the motor spacer.

Bowman Refrigeration 206-706-3033

DANGER

- **Make sure that the lifting equipment and wires have sufficient load capacity for the compressor. Otherwise, the compressor may fall, resulting in death or injuries and damage to the compressor. Do not allow anyone to be under the lifted compressor. (Compressor weight: 685 - 760 kgf)**

11. With the compressor lifted, remove the drain plug at the bottom of the compressor as shown in the figure and drain refrigerant oil.

WARNING

- **If there is residual high-pressure gas/refrigerant or high-pressure oil dissolved in refrigerant within the hydraulic cylinder (variable Vi cylinder and capacity control cylinder), the refrigerant gas or oil may blow off when the oil drain plugs are removed. This may result in injury such as frostbite and loss of vision. Therefore always check and confirm the pressure in the hydraulic cylinder, before the oil drain plugs are opened, and wear protective equipments such as goggles and chemical resistant gloves..**

【POINT】

- Make sure to reattach the removed plugs to the original positions (to prevent any plug being left detached).

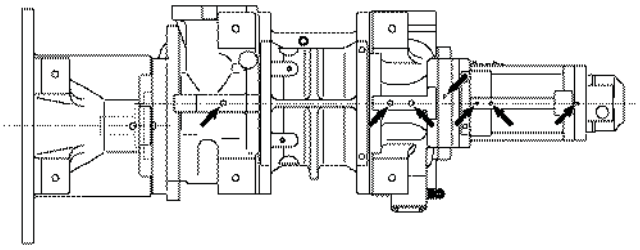

12. Remove the bottom four hexagon socket head cap screws (M16×60), which connect the main rotor casing with the bearing head, and the suction cover.

【POINT】

- It is unsafe to remove the bottom screws from the main rotor casing with the compressor lifted. Make sure to remove the bottom screws from the main rotor casing after placing the compressor on a work bench.

13. Prepare the necessary tools. (Refer to the list of tools.)

Bowman Refrigeration 206-706-3033

5.4.2 Common Work Items

- When attaching an O-ring, apply a thin coat of silicon grease to it.
- When installing a casing or cover with an O-ring, apply a thin coat of silicon grease to the outer connecting faces of the O-ring groove.

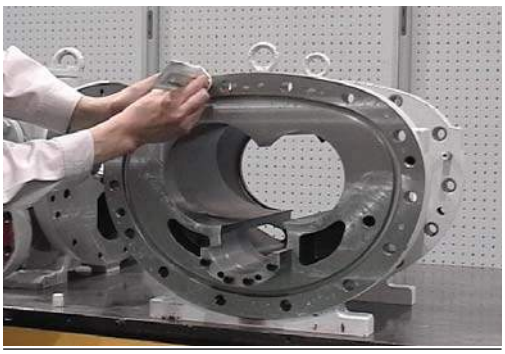

- Clean the removed parts of any contamination and dirt. When storing the parts, take appropriate measures to prevent rust and damage.
- When assembling parts, make sure to lubricate them. (bearing, balance piston, rotor)
- For the parallel pin and locknut threads, apply sticking-preventive lubricants. (molybdenum disulfide, a solid lubricant).

- Before hammering in the parallel pin, tighten the four bolts lightly in diagonal sequence with a wrench.
- Tighten the bolts, locknuts, and plugs, to the specified torque using a torque wrench. (Refer to The Table for Tightening Torques of Bolts and Nuts.)
- For the retaining ring, always use retaining ring pliers that match the size of the stop ring.

⚠ CAUTION

- **The retaining ring may jump out, causing injuries. Always use retaining ring pliers of appropriate size and wear protective goggles.**

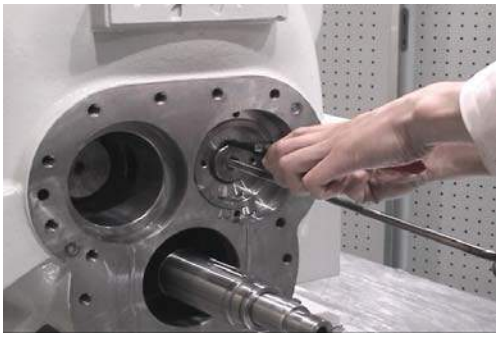

- When installing the bearing, the surface with stamped letters must face the worker.

Bowman Refrigeration 206-706-3033

- The thrust bearing should be positioned so that the apex of the “V”, or “Sharp end” inscribed on the bearing is on the rotor side.

- Before disassembly or assembly of the casings and covers, first remove the upper two bolts and attach the jacking bolts to prevent the casing from falling.

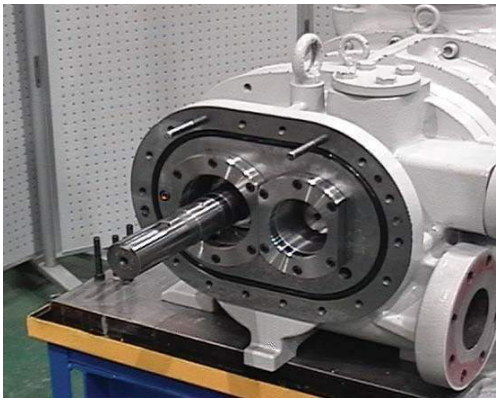

⚠ CAUTION

- **Any casing or cover dropped may cause injuries or damage to the compressor. Always attach safety bolts before installing or disassembling the casing or cover.**

- To disassemble the casing, first loosen all bolts and then remove the parallel pin using two service holes located in diagonal positions.
- Notice that the lock nut for the unloader push rod is harder to screw in because it is high friction locking devices. To assemble the nut, use a locknut wrench.
- Use liquid gasket (for example, HERME SEAL) or silicon grease for the suction adapter tightening bolts.

Bowman Refrigeration 206-706-3033

5.4.3 Vi Position Sensor

【POINT】

- Assemble the Vi position sensor finally after assembling all other parts.

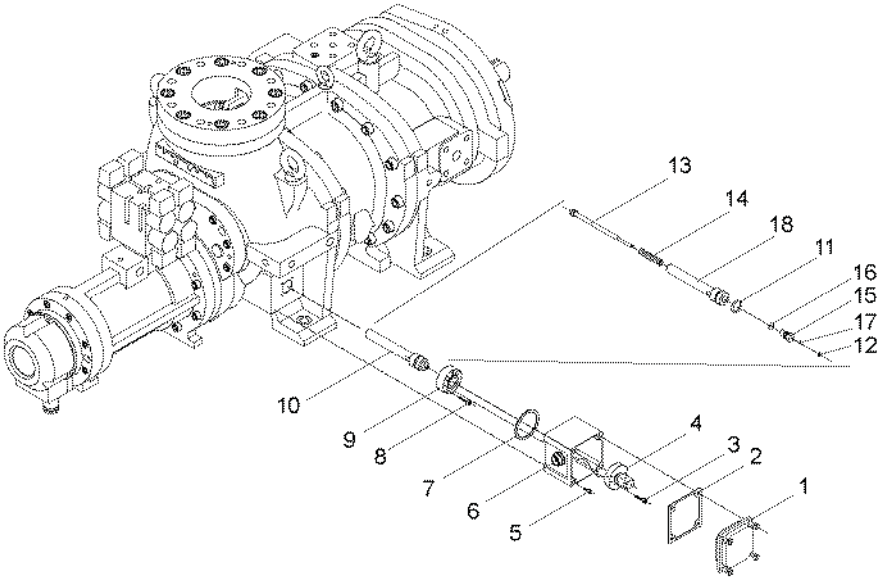

Order	Description	Part No.
1	Sensor box lid	—
2	Sensor box lid packing	—
3	Hexagon socket head cap screw (M6×25)	723
4	Vi position sensor assembly	—
	Vi position sensor	721
	Vi position sensor support	720
	Hexagon socket head cap screw (M3×10)	722
5	Hexagon socket head cap screw (M5×15)	726
6	Vi position sensor box	724
7	Packing, Vi position sensor box	725
8	Hexagon socket head cap screw (M6×25)	719

Order	Description	Part No.
9	Gland, Vi position sensor rod housing	718
10	Vi position sensor rod housing assembly	—
11	O-ring (G25)	717
12	Retaining ring	716
13	Vi position sensor rod	712
14	Spring	711
15	Plug, Vi position sensor rod	715
16	O-ring (P12)	713
17	O-ring (P6)	714
18	Vi position sensor rod housing	709

1. Remove the parts in the order of the numbers shown in the figure.

2. Install the parts in the reverse order of removing.

Bowman Refrigeration 206-706-3033

5.4.3.1 Precautions for Removal

■ **Sensor box lid**

【POINT】

- The sensor box lid mounting bolts are structured so that they do not drop off from the lid.

■ **Vi position sensor assembly**

1. To remove the Vi position sensor rod housing, turn the Vi position sensor rod plug (No.714) clockwise using a wrench.

■ **Retaining ring/Vi position sensor rod**

⚠ CAUTION

- **The retaining ring may jump out, causing injuries. Make sure to use a retaining ring removing/attaching tool of suitable size and wear protective tools such as protective goggles.**
- **Because the Vi position sensor assembly uses a spring, the Vi position sensor rod may jump out and cause injuries. During and after retaining ring removal, do not direct the Vi position sensor assembly toward anyone.**

5.4.3.2 Precautions for Installation

■ **O-ring**

1. Make sure that all necessary O-rings are attached. (In particular, part No. 714)

■ **Retaining ring/Vi position sensor rod**

⚠ CAUTION

- **The retaining ring may jump out, causing injuries. Make sure to use a retaining ring removing/attaching tool of suitable size and wear protective tools such as protective goggles.**
- **Because the Vi position sensor assembly uses a spring, the Vi position sensor rod may jump out and cause injuries. During and after retaining ring removal, do not direct the Vi position sensor assembly toward anyone.**

■ **Vi position sensor rod housing gland**

1. Install the Vi position sensor rod housing gland of the groove facing down.

Bowman Refrigeration 206-706-3033

5.4.4 Seal Cover

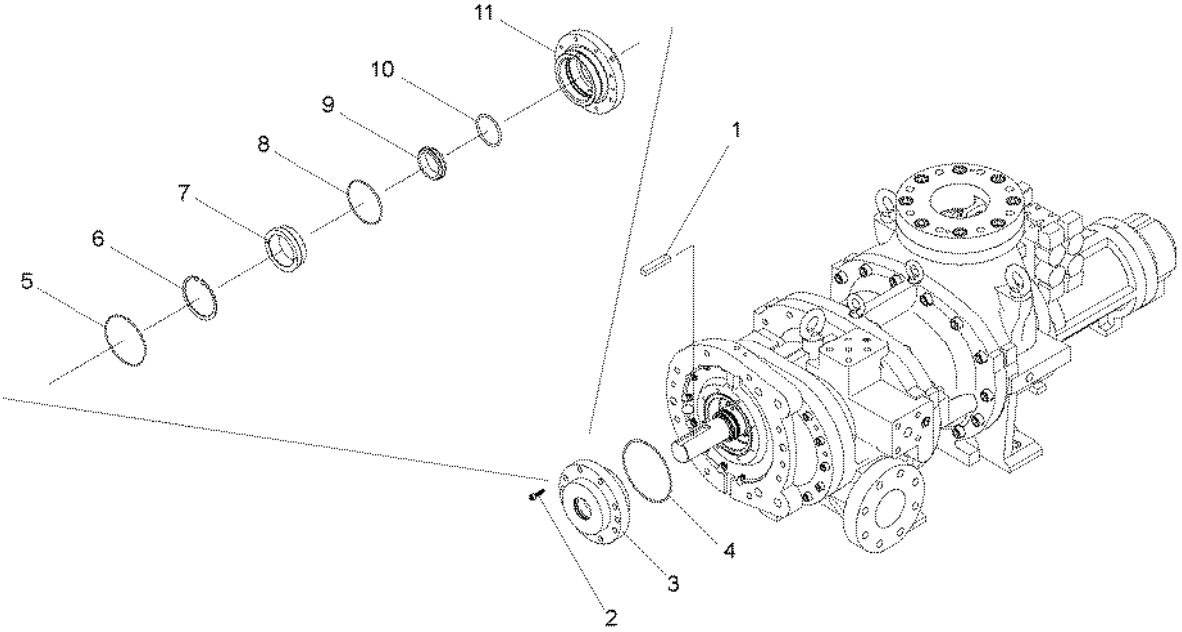

Order	Description	Part No.
1	Shaft key	91
2	Hexagon socket head cap screw (M8×30)	53
3	Seal cover assembly	—
4	O-ring (G145)	52-2
5	O-ring (G120)	52-1
6	Retaining ring (H100)	658
7	Sleeve, shower flushing	611

Order	Description	Part No.
8	O-ring (G100)	657
9	Mechanical seal assembly	100
	Mating ring	100-2
10	Mechanical seal assembly	100
	Maiting ring O-ring	100-1
11	Shaft seal cover	51

1. Remove the parts in the order of numbers shown in the figure.

2. Install the parts in the reverse order of removing.

Bowman Refrigeration 206-706-3033

5.4.4.1 Precautions for Removal

■ **Seal cover assembly**

CAUTION

- **When removing the seal cover assembly, do not damage the male rotor shaft surface and the mechanical seal mating ring.**

【POINT】

- Prepare an appropriate container to collect any refrigerant oil that may flowout when the seal cover assembly is removed.

1. Using eyebolts (M8), remove the seal cover.

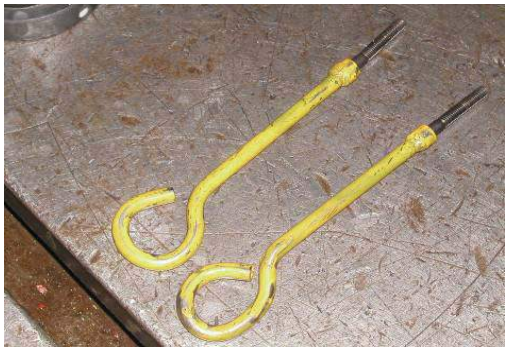

■ **Retaining ring**

CAUTION

- **The retaining ring may jump out causing injuries. Always use retaining ring pliers of appropriate size and wear protective goggles.**

■ **Shower flushing sleeve**

1. Using eyebolts (M8), remove the shower flashing sleeve.

■ **Mechanical seal assembly (mating ring)**

1. Remove the mechanical seal mating ring from the seal cover.

5.4.4.2 Precautions for Installation

■ **O-ring**

1. Make sure that all necessary O-rings are all attached.

■ **Mechanical seal assembly (mating ring)**

1. Attach the mating ring to the seal cover.

■ **Shower flushing sleeve**

1. Using eyebolts (M8), install the shower flashing sleeve.

Bowman Refrigeration 206-706-3033

■ Retaining ring

⚠ CAUTION

- **The retaining ring may jump out, causing injuries. Always use retaining ring pliers of appropriate size and wear protective goggles.**

■ Seal cover assembly

CAUTION

- **When removing the seal cover assembly, do not damage the male rotor shaft surface and the mechanical seal mating ring.**

1. Lubricate the seal ring of the male rotor shaft with refrigerant oil.
2. Lubricate the mating ring of the seal cover assembly with refrigerant oil.

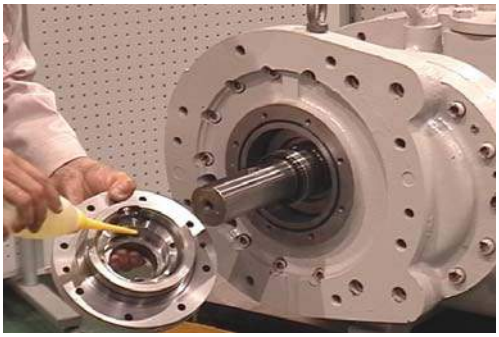

■ Shaft key

1. Check for damages. If anything wrong is found, replace the key.

Bowman Refrigeration 206-706-3033

5.4.5 Bearing Cover

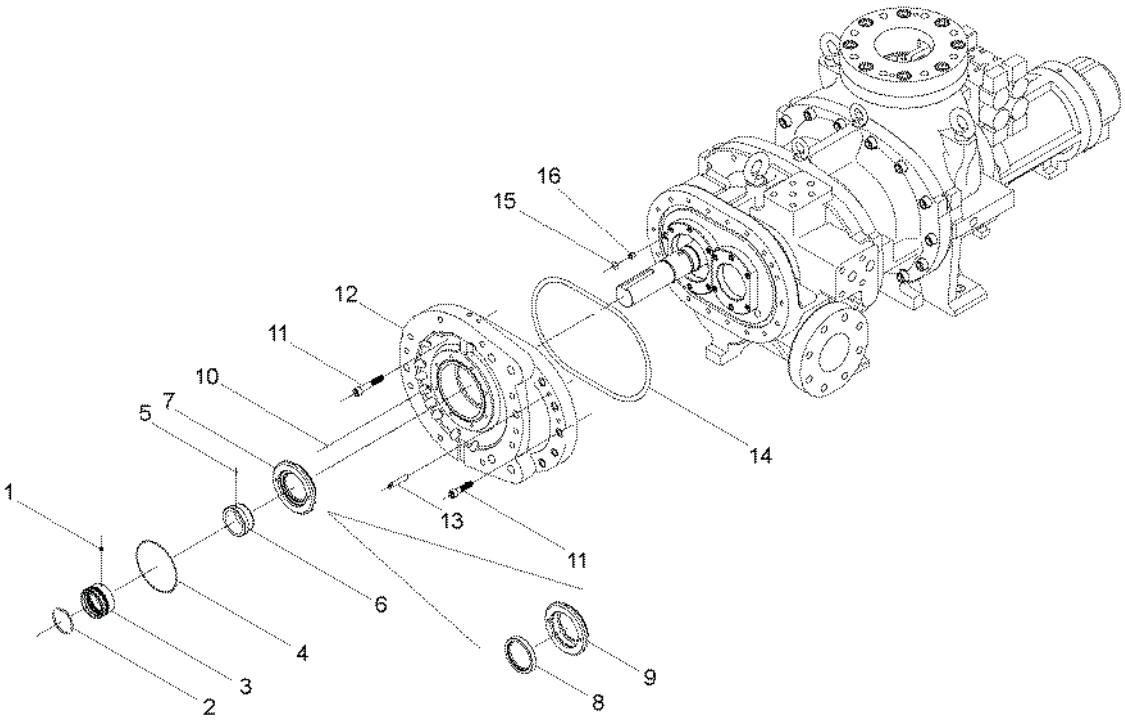

Order	Description	Part No.	Order	Description	Part No.
1	Mechanical seal assembly	100	8	Oil seal	50
	Hexagon socket set screw (M8×9)	100-5	9	Retainer for oil seal	48
2	Mechanical seal assembly	100	10	Spring pin (3 dia.×8)	20
	O-ring	100-4	11	Hexagon socket head cap screw (M12×50)	18-1
3	Mechanical seal assembly	100		Hexagon socket head cap screw (M12×70)	18-2
	Rotating ring	100-3	12	Bearing cover	16
4	O-ring (G120)	49	13	Parallel pin (10 dia. ×55)	19
5	Hexagon socket set screw (M6×8)	529	14	O-ring (P300)	17-1
6	Sleeve, oil seal	528	15	O-ring (P14)	17-2
7	Retainer for oil seal	–	16	Bush, P14 type O-ring	537

1. Remove the parts in the order of the numbers shown in the figure.

2. Install the parts in the reverse order of removing.

5.4.5.1 Precautions for Removal

■ **Mechanical seal assembly (rotating ring)**

CAUTION

- **Loosen the hexagon socket set screw for at least more than 5 turns and remove mechanical seal assembly from the male rotor shaft. If the hexagon socket set screw is not turned and loosened for 5 turns or more, the male rotor shaft surface may be damaged.**

Bowman Refrigeration 206-706-3033

■ Oil seal sleeve/retainer for oil seal

CAUTION

- **Loosen the hexagon socket set screw for at least more than 2 turns and remove the oil seal sleeve from male rotor shaft. If the hexagon socket set screw is not turned and loosened for 2 turns or more, the male rotor shaft surface may be damaged.**

1. Loosen the hexagon socket set screw for oil seal sleeve at least 2 turns or more.

2. Attach eyebolts (M8) to the retainer for oil seal, remove the retainer and oil seal sleeve as an assembly.

3. Using a flat screwdriver and a hammer, remove the oil seal from the retainer.

【POINT】

- The spring pin (3 dia. x 8) attached to the bearing cover may not be pulled out during a regular service.

■ Bearing cover

⚠ CAUTION

- **If the lifting equipment and lifting slings in use do not have sufficient loading capacity, the bearing cover may fall causing injuries and damage to the compressor. Before starting the lifting work, always check that the lifting equipment and lifting slings have sufficient loading capacity. Do not allow anyone to be under the lifted bearing cover. (Bearing cover weight: 47 kgf)**

1. Remove the two upper hexagon socket head cap screws (M12×50 and M12×70) and attach safety bolts.

2. Remove the rest of the hexagon socket head cap screws (M12×70 and M12×50).

3. To pull out the parallel pins, insert hexagon socket head cap screws (M12) into the service holes and tighten the hexagon socket head cap screws so that the gap between the bearing cover and the bearing head expands in parallel.

【POINT】

- The parallel pins must be pulled out evenly, and bearing cover surface and bearing head surface must be evenly separated. If they are not evenly separated and the surface is inclined, use a plastic hammer to adjust the gap evenly.

4. Using the lifting equipment, remove the bearing cover.

CAUTION

- **Do not damage the male rotor shaft surface, when removing the bearing cover.**

Bowman Refrigeration 206-706-3033

5.4.5.2 Precautions for Installation

■ **Bearing cover**

CAUTION

- **If the lifting equipment and lifting slings in use do not have sufficient loading capacity, the bearing cover may fall causing injuries and damage to the compressor. Before starting the lifting work, always check that the lifting equipment and lifting slings have sufficient loading capacity. Do not allow anyone to be under the lifted bearing cover. (Bearing cover weight: 47 kgf)**

CAUTION

- **Do not damage the male rotor shaft surface, when installing the bearing cover.**

■ **O-ring (P300)**

1. After disassembly, replace the existing O-rings with new ones.

■ **Oil seal**

1. Using an appropriate tool such as a plastic block, insert the oil seal fully into the retainer for oil seal by tapping.

■ **Oil seal sleeve/oil seal/retainer for oil seal**

1. Lubricate the oil seal sleeve with refrigerant oil.
2. Insert the oil seal sleeve into the retainer for oil seal.
3. Attach eyebolts (M8) to the retainer for oil seal and install both the retainer and the oil seal sleeve as an assembly into the bearing cover.
4. When installing the retainer for oil seal assembly into the bearing cover, face the cutout of retainer upward and align the cutout of retainer to the spring pin on the bearing cover.

■ **Mechanical seal assembly**

1. Install the mechanical seal ring by aligning the hexagon socket set screw positions and the drilled holes of the male rotor shaft.

Bowman Refrigeration 206-706-3033

5.4.6 Unloader Indicator/Capacity Control Solenoid Valve

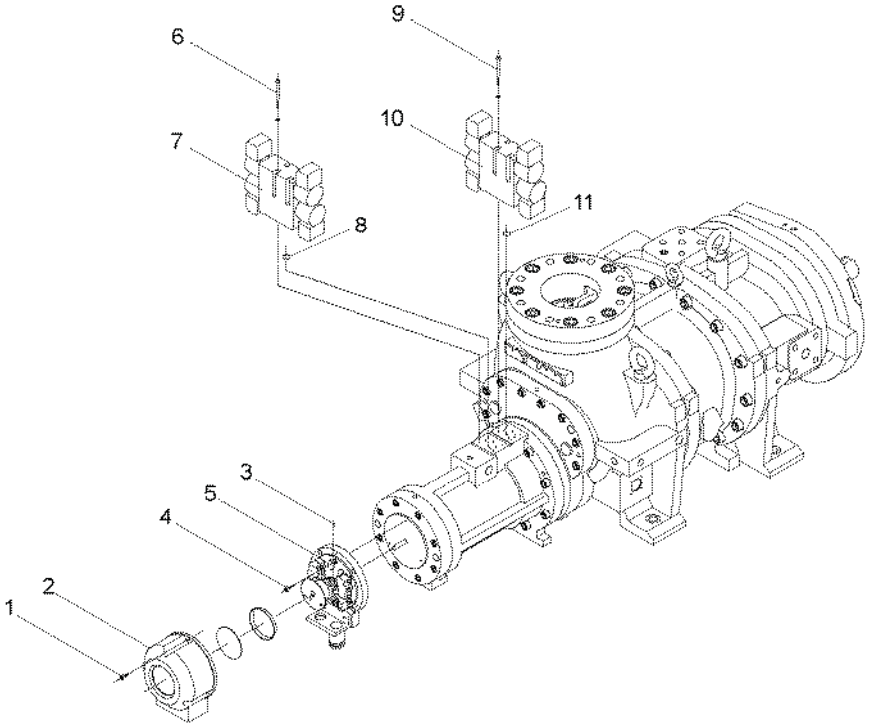

Order	Description	Part No.
1	Hexagon socket head cap screw (M6×15)	147
2	Unloader indicator cover	146
3	Hexagon socket set screw (M4×8)	128
4	Hexagon socket head cap screw (M6×20)	122
5	Assembly, unloader indicator	120
6	Hexagon socket head cap screw (M5×70 for Nichiden)	535
	Hexagon socket head cap screw (M5×55 for Danfoss)	
7	Capacity control solenoid valve (Nichiden)	562
	Capacity control solenoid valve (Danfoss)	

Order	Description	Part No.
8	O-ring (JIS B 2401 P12 for Nichiden)	561
	O-ring (AS 568A 012 for Danfoss)	
9	Hexagon socket head cap screw (M5×70 for Nichiden)	535
	Hexagon socket head cap screw (M5×55 for Danfoss)	
10	Variable Vi solenoid valve (Nichiden)	562
	Variable Vi solenoid valve (Danfoss)	
11	O-ring (JIS B 2401 P12 for Nichiden)	561
	O-ring (AS 568A 012 for Danfoss)	

1. Remove the parts in the order of the numbers shown in the figure.

2. Install the parts in the reverse order of removing.

Bowman Refrigeration 206-706-3033

5.4.6.1 Precautions for Removal

■ **Capacity control solenoid valve/variable Vi solenoid valve**

⚠ WARNING

- **If there is residual high-pressure gas/refrigerant or high-pressure oil dissolved in refrigerant within the variable Vi cylinder and the capacity control cylinder, the refrigerant gas or oil may blow off when the capacity control solenoid valve and the variable Vi cylinder are removed. This may result in injury such as frostbite and loss of vision. Therefore always check that all plugs are opened, before the capacity control solenoid valve and the variable Vi cylinder are removed.**

5.4.6.2 Precautions for Installation

■ **Capacity control solenoid valve/variable Vi solenoid valve**

【POINT】

- Install the capacity control solenoid valve and variable Vi solenoid valve, after assembling all other parts of the unloader cylinder and the variable Vi cylinder.

Bowman Refrigeration 206-706-3033

5.4.7 Unloader Cover

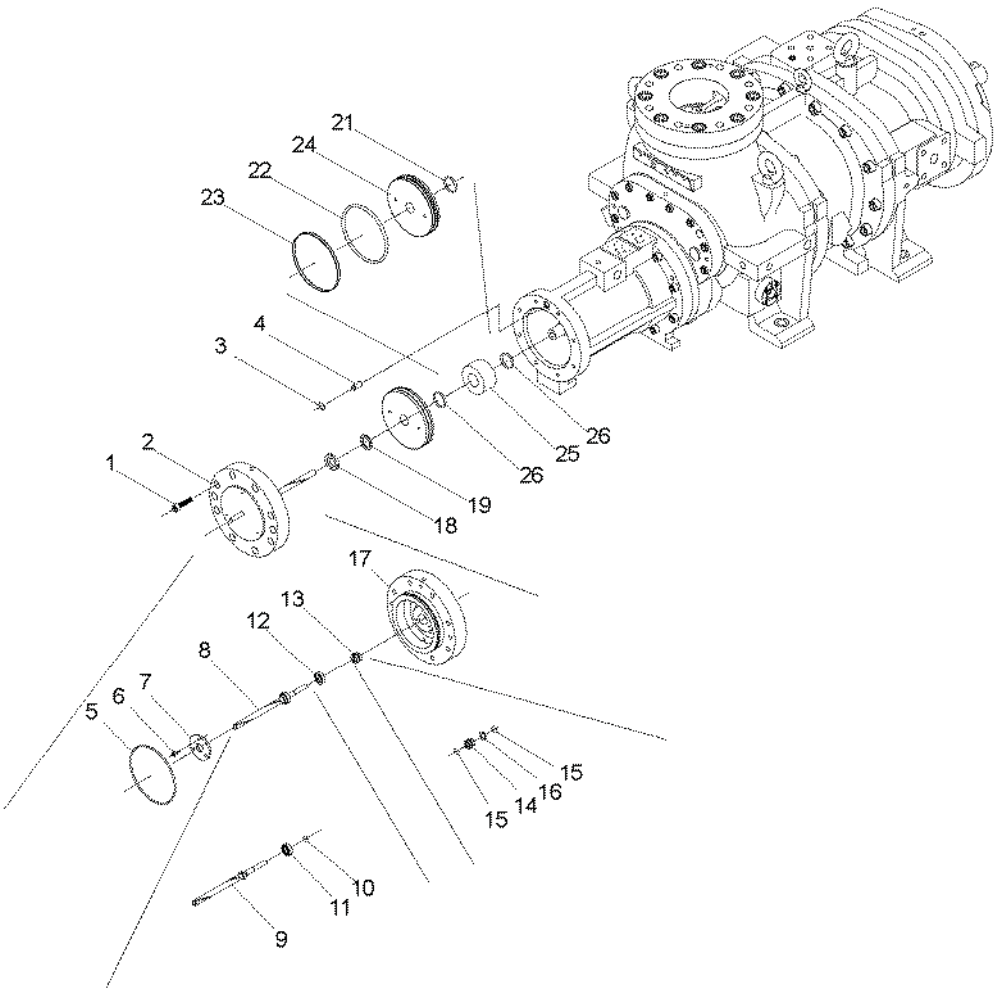

Order	Description	Part No.	Order	Description	Part No.
1	Hexagon socket head cap screw (M10×40)	76	14	Retainer, O-ring	83
2	Unloader cover assembly	—	15	O-ring (P10A)	82-1
3	O-ring (P14)	75-2	16	O-ring (P16)	82-2
4	Bush, P14 type O-ring	537	17	Unloader cover	74
5	O-ring (G135)	75-1	18	FU nut (FU05SS)	69
6	Hexagon socket head cap screw (M6×15)	81	19	Spacer for unloader piston	70
7	Bearing gland	80	20	Unloader piston assembly	—
8	Unloader indicator cam assembly	—	21	O-ring (P32)	73
9	Unloader indicator cam	77	22	Teflon cap seal	66
10	Retaining ring	79	23	O-ring (P130)	65
11	Ball bearing	78	24	Unloader piston	64
12	Spacer, unloader cover	84	25	Unloader spacer	420
13	Retainer assembly, O-ring	—	26	O-ring (P32)	421

1. Remove the parts in the order of the numbers shown in the figure.

2. Install the parts in the reverse order of removing.

Bowman Refrigeration 206-706-3033

5.4.7.1 Precautions for Removal

■ **Unloader cover assembly**

CAUTION

- **Pull out the unloader cover assembly horizontally. The unloader indicator cam may be damaged if handled inappropriately.**

【POINT】

- The unloader indicator cam is assembled in the unloader cover assembly. The unloader indicator cam is fitted on the internal surface of the unloader slide valve push rod and rotated by the pin of the push rod as guide.

1. Insert hexagon socket head cap screws (M10) in the service holes and tighten the screws evenly to expand the gap between the flange faces of unloader cylinder and unloader cover.
2. Hold the hexagon socket head cap screws (M10), pull out the unloader cover horizontally and remove.

■ **Retaining ring**

⚠ CAUTION

- **The retaining ring may jump out, causing injuries. Always use retaining ring pliers of appropriate size and wear protective goggles.**

■ **O-ring (P10A)**

1. If the O-ring remains on the unloader cover, remove it by using an appropriate tool (2—3 mm dia. wire with a flat point).

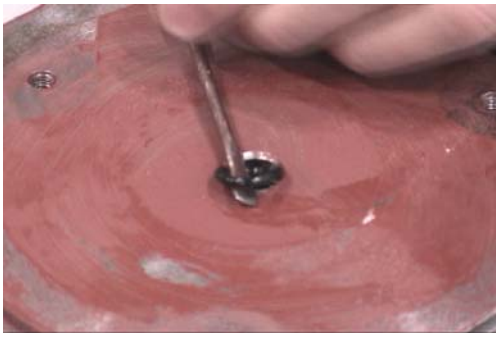

■ **FU nut**

【POINT】

- The FU nut has a high friction locking device. Turn the FU nut with a locknut wrench until it is loosened.

■ **Unloader piston**

1. Using eyebolts (M8), remove the unloader piston from the unloader push rod.

CAUTION

- **The 170JS and 170JM have an unloader spacer installed at the back of unloader piston. Therefore, remove the unloader spacer form the unloader push rod after removing the unloader piston, when disassembling the 170JS and 170JM.**

Bowman Refrigeration 206-706-3033

5.4.7.2 Precautions for Installation

■ **Unloader piston**

CAUTION

- **The 170JS and 170JM have an unloader spacer installed at the back of unloader piston. Therefore, install the unloader spacer to the unloader push rod before installing the unloader piston, when assembling the 170JS and 170JM.**

1. Attach the O-ring (P130) to the unloader piston.
2. Attach the Teflon cap seal to the outside of the O-ring.
3. Using eyebolts (M8), put the unloader piston into the unloader cylinder and install the unloader piston to the unloader push rod.

■ **O-ring (P130)**

【POINT】

- Do not apply silicon grease to the O-ring (P130) of the unloader piston.

■ **Teflon cap seal**

【POINT】

- Attach the Teflon cap seal to cover the outside of the O-ring. Make sure both sides of the Teflon cap seal do not stick out of the O-ring groove on the unloader piston.

■ **Push rod**

【POINT】

- Pull the push rod towards yourself so that the push rod can be inserted into the internal face of the unloader piston, before inserting the unloader piston into the unloader cylinder.

■ **O-ring (P10A)**

1. Assemble the O-ring (P10A) to the inside of the O-ring retainer in advance.

■ **O-ring retainer**

1. Attach two O-rings (P10A) to the inner face of the O-ring retainer and one O-ring (P16) to the outer face, and install the O-ring retainer to the unloader cover.

■ **Unloader cover spacer**

1. Install the unloder cover spacer to the unloader cover with the flat face to the atmosphere side.

Bowman Refrigeration 206-706-3033

■ Unloader indicator cam assembly

1. Install the ball bearing to the cam shaft, with the surface with stamped letters (mfg codes) of the ball bearing facing the atmosphere side.
2. Attach the retaining ring (S10).
3. Install the unloader indicator cam with the ball bearing to the unloader cover.

■ Bearing gland

1. Install the bearing gland so that it contacts the ball bearing of the unloader indicator cam.

■ FU nut

【POINT】

- The FU nut has a high friction locking device. Turn the FU nut with a locknut wrench when tightening the FU nut.

■ Retaining ring

⚠ CAUTION

- **The retaining ring may jump out, causing injuries. Always use retaining ring pliers of appropriate size and wear protective goggles.**

■ Unloader cover assembly

CAUTION

- **Install the unloader cover horizontally to the unloader cylinder. The unloader indicator cam may be damaged if handled inappropriately.**

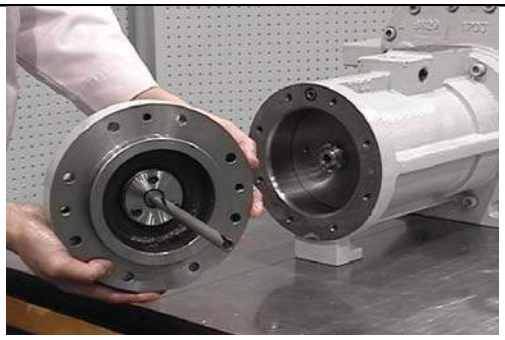

1. The unloader indicator cam groove opening must face upwards, when installing into the unloader slide valve push rod pin.
2. Install the unloader assembly to the unloader cylinder with the diagonal service holes of the unloader cover horizontal, and with one of the three tap holes for unloader indicator assembly above the horizontal service holes.
3. Check that the cam rotates smoothly by moving the unloader cover assembly back and forth horizontally.

Bowman Refrigeration 206-706-3033

5.4.8 Unloader Cylinder

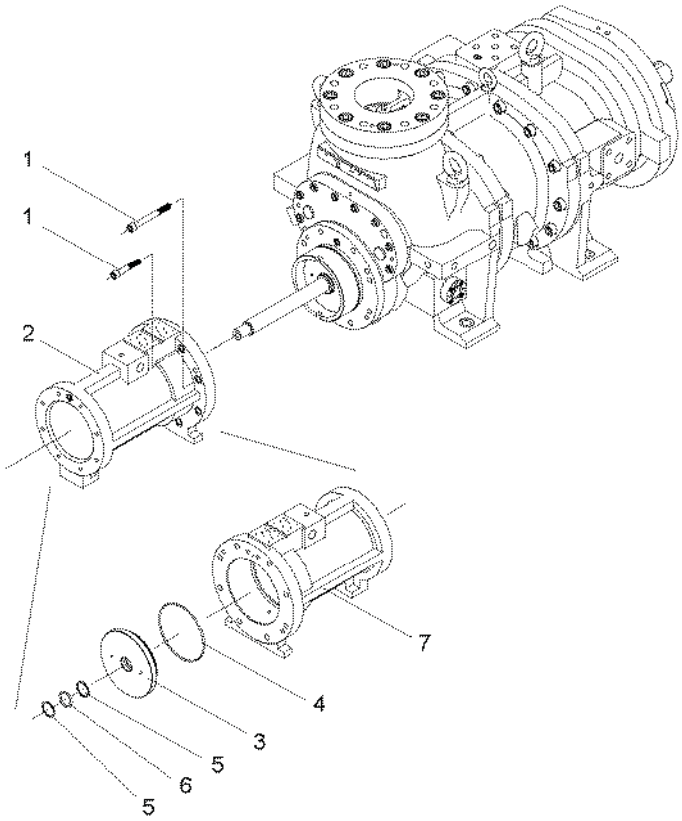

Order	Description	Part No.
1	Hexagon socket head cap screw (M12×70)	61
	Hexagon socket head cap screw (M12×110)	62
2	Unloader cylinder assembly	—
3	Partition plate, unloader cylinder	297

Order	Description	Part No.
4	O-ring (G135)	298
5	Back-up ring for O-ring	325-2
6	O-ring (P32)	325-1
7	Unloader cylinder	60

1. Remove the parts in the order of the numbers shown in the figure.

2. Install the parts in the reverse order of removing.

5.4.8.1 Precautions for Removal

■ **Unloader cylinder assembly**

⚠ CAUTION

- **If the lifting equipment and lifting slings in use do not have sufficient loading capacity, the unloader cylinder assembly may fall causing injuries and damage to the compressor. Before starting the lifting work, always check that the lifting equipment and lifting slings have sufficient loading capacity. Do not allow anyone to be under the lifted unloader cylinder assembly. (Unloader cylinder assembly weight: 30 kgf)**

1. Remove the plastic caps from the eyebolt holes and service holes.

Bowman Refrigeration 206-706-3033

2. Attach eyebolt (M12) in eyebolt hole.
3. Remove the two upper hexagon socket head cap screws (M12×70) and attach safety bolts.
4. Remove the hexagon socket head cap screws (M12×110).
5. Insert the hexagon socket head cap screws (M12) into the service holes and tighten the hexagon socket head cap screws evenly.
6. After the fitted part of the unloader cylinder and balance piston cover is separated, pull the unloader cylinder assembly horizontally towards yourself to remove the unloader cylinder assembly from the unloader slide valve push rod.
7. Lift and carry the unloader cylinder with lifting equipment by using the attached eyebolt (M12) on the unloader cylinder.

【POINT】

- Push the unloader slide valve push rod into the inner part of unloader cylinder using eyebolts(M8) attached to the unloader piston, before removing the unloader cylinder.

CAUTION

- **Pull the unloader cylinder straight and horizontally not to damage the unloader slide valve push rod.**

■ Unloader cylinder partition plate

1. Using eyebolts (M8), remove the unloader cylinder partition plate.

5.4.8.2 Precautions for Installation

■ O-ring

1. Make sure that all necessary O-rings are attached.

■ Back-up ring for O-ring

1. Attach the back-up rings to the unloader cylinder partition plate while paying appropriate attention to the direction of the bias cut surface. Ensure that the joint of back-up ring mates, and that the O-ring fits between the two back-up rings.

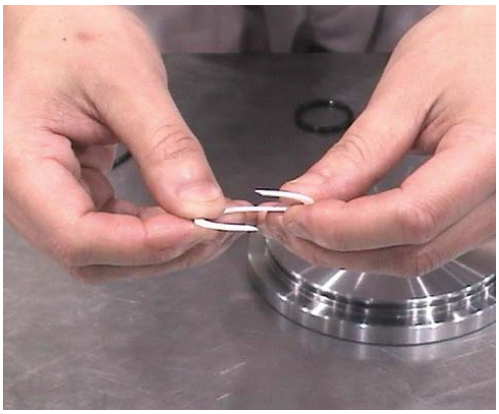

■ Unloader cylinder partition plate

1. Install unloader cylinder partition plate to the unloader cylinder with the projection side facing out towards the atmosphere.

【POINT】

- Do not jam the O-ring between the unloader cylinder partition plate and the unloader cylinder.

Bowman Refrigeration 206-706-3033

■ Unloader cylinder assembly

⚠ CAUTION

- **If the lifting equipment and lifting slings in use do not have sufficient loading capacity, the unloader cylinder assembly may fall causing injuries and damage to the compressor. Before starting the lifting work, always check that the lifting equipment and lifting slings have sufficient loading capacity. Do not allow anyone to be under the lifted unloader cylinder assembly. (Unloader cylinder assembly weight: 30 kgf)**

CAUTION

- **Check the two plugs (R1/8)（732-C, 732-D）installed to the Vi cylinder side flange face of the unloader cylinder.**

■ Hexagon socket head cap screw (M12×70/M12×110)

1. For the upper two bolts, the size is M12×70. Other screws are of M12×110. Pay attention to the size difference.

Bowman Refrigeration 206-706-3033

5.4.9 Vi Cylinder

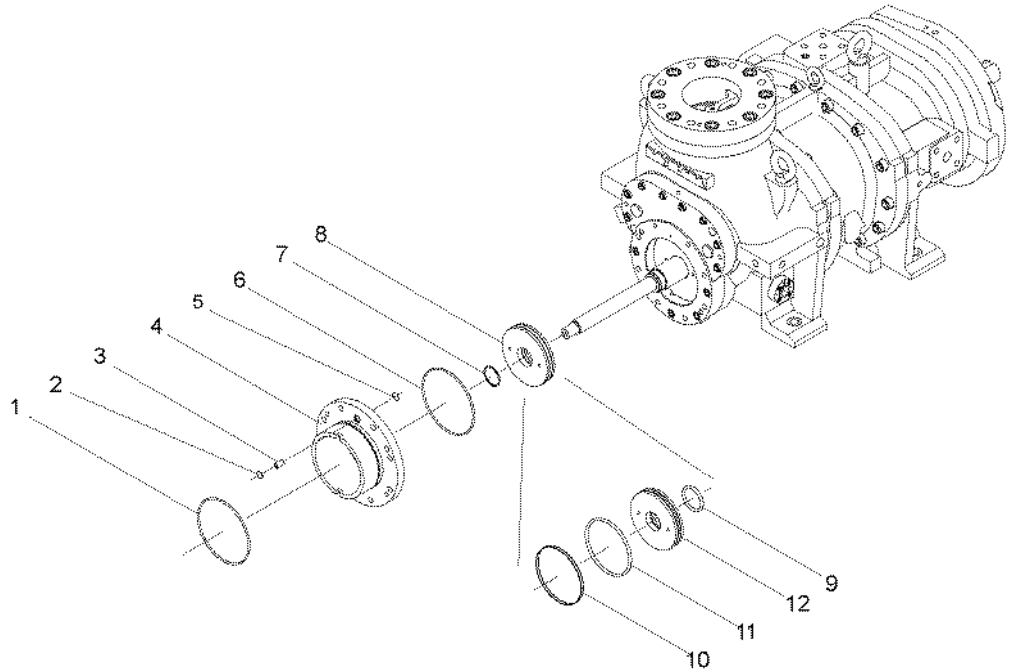

Order	Description	Part No.	Order	Description	Part No.
1	O-ring (WG36)	63-1	7	Spiral retaining ring	293
2	O-ring (P14)	63-2	8	Vi piston assembly	—
3	Bush, P14 type O-ring	537	9	O-ring (P52)	295
4	Cylinder, Vi	296	10	Teflon cap seal	66
5	O-ring (P14)	63-2	11	O-ring (P130)	65
6	O-ring (WG36)	63-1	12	Piston, Vi	294

1. Remove the parts in the order of the numbers shown in the figure.
2. Install the parts in the reverse order of removing.

5.4.9.1 Precautions for Removal

■ Vi cylinder

1. Attach the hexagon socket head cap screws (M12) into the service holes of the Vi cylinder and tighten them evenly to separate the Vi cylinder from the balance piston cover in parallel.
2. After the O-ring part of the Vi cylinder is pulled out, remove the Vi cylinder from the Vi piston by holding the hexagon socket head cap screws (M12) used as service bolts.

■ Spiral retaining ring

⚠ CAUTION

- **Do not extend the spiral retaining ring excessively in the circumferential direction. It may cause injuries if extended excessively in the circumferential direction.**

■ Vi piston assembly

1. Using eyebolts, remove the Vi piston assembly from the Vi push rod.

Bowman Refrigeration 206-706-3033

5.4.9.2 Precautions for Installation

■ **Spiral retaining ring**

⚠ CAUTION

- **Do not extend the spiral retaining ring excessively in the circumferential direction. It may cause injuries if extended excessively in the circumferential direction.**

【POINT】

- If the spiral retaining ring is distorted, replace it with new one.

■ **O-ring (P130)**

【POINT】

- Do not apply silicon grease to the O-ring (P130) of the Vi piston.

■ **Teflon cap seal**

【POINT】

- Attach the Teflon cap seal to cover the outside of the O-ring. Make sure both sides of the Teflon cap seal do not stick out of the O-ring groove on the unloader piston.

■ **Vi cylinder**

1. Lubricate the inner face of Vi cylinder with refrigerant oil.
2. Install the Vi cylinder to the Vi piston and push the Vi cylinder into the balance piston cover.

Bowman Refrigeration 206-706-3033

5.4.10 Balance Piston Cover

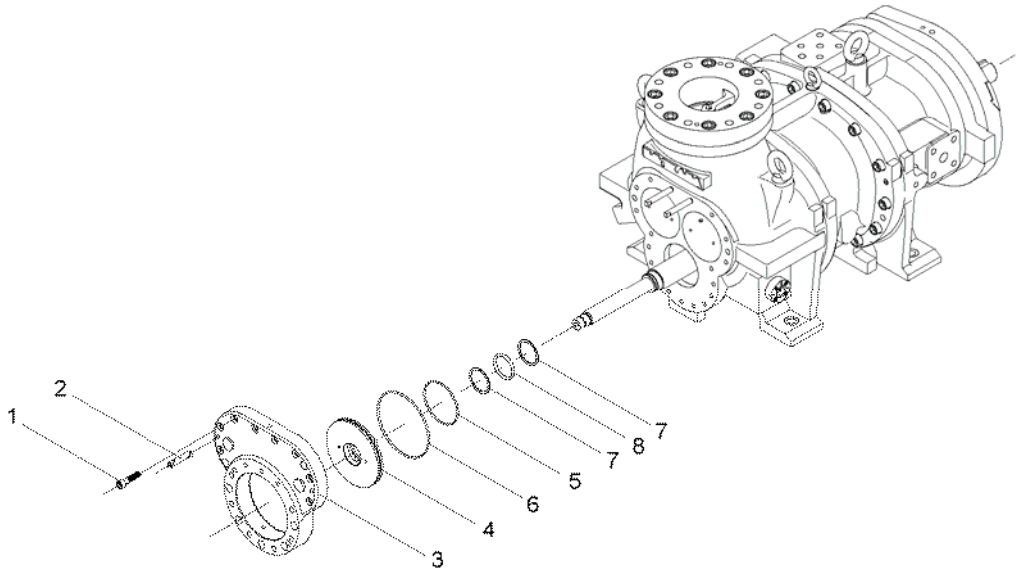

Order	Description	Part No.	Order	Description	Part No.
1	Parallel pin (10 dia. x 55)	591	5	O-ring (G100)	299-1
2	Hexagon socket head cap screw (M12×50)	24	6	O-ring (WG36)	299-2
3	Balance piston cover	22	7	Back-up ring for O-ring	9-2
4	Partition plate, suction cover	736	8	O-ring (P52)	9-1

1. Remove the parts in the order of the numbers shown in the figure.

2. Install the parts in the reverse order of removing.

5.4.10.1 Precautions for Removal

■ Parallel pin

1. Remove the two upper hexagon socket head cap screws (M12×50) and attach safety bolts.

2. Using the appropriate tool with the tap hole on the parallel pins, remove the parallel pin. (Or it is recommended to use slide hammer tool to remove the parallel pins.)

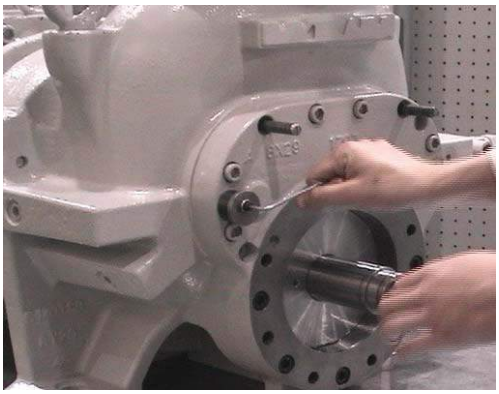

■ Balance piston cover

⚠ CAUTION

- **The balance piston cover may fall causing injuries or damage to the compressor. Before starting the removing work, always attach safety bolts (M12×75). (Balance piston cover weight: 17 kgf)**

1. After pulling out the parallel pin, loosen the rest of the hexagon socket head cap screws (M12×50) and remove the balance piston cover.

Bowman Refrigeration 206-706-3033

■ Suction cover partition plate

1. Using eyebolts (M8), remove the suction cover partition plate.

5.4.10.2 Precautions for Installation

■ O-ring

1. Make sure that all necessary O-rings are attached.

■ Back-up ring for O-ring

1. Attach the back-up rings to the suction cover partition plate while paying appropriate attention to the direction of the bias cut surface. Ensure that the joint of backup ring mates, and the O-ring fits between the two back-up rings.

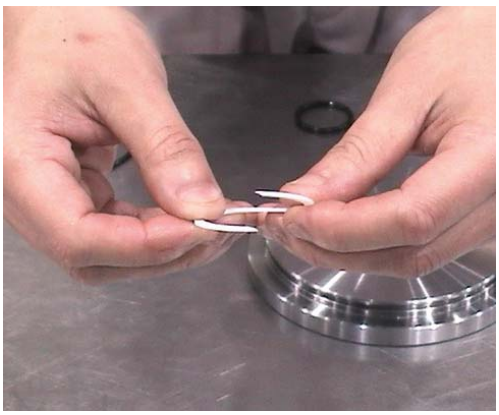

■ Balance piston cover

⚠ CAUTION

- **The balance piston cover may cause injuries or damage to the compressor. Before starting the installing work, always attach safety bolts (M12×75). (Balance piston cover weight: 17 kgf)**

Bowman Refrigeration 206-706-3033

5.4.11 Suction Cover

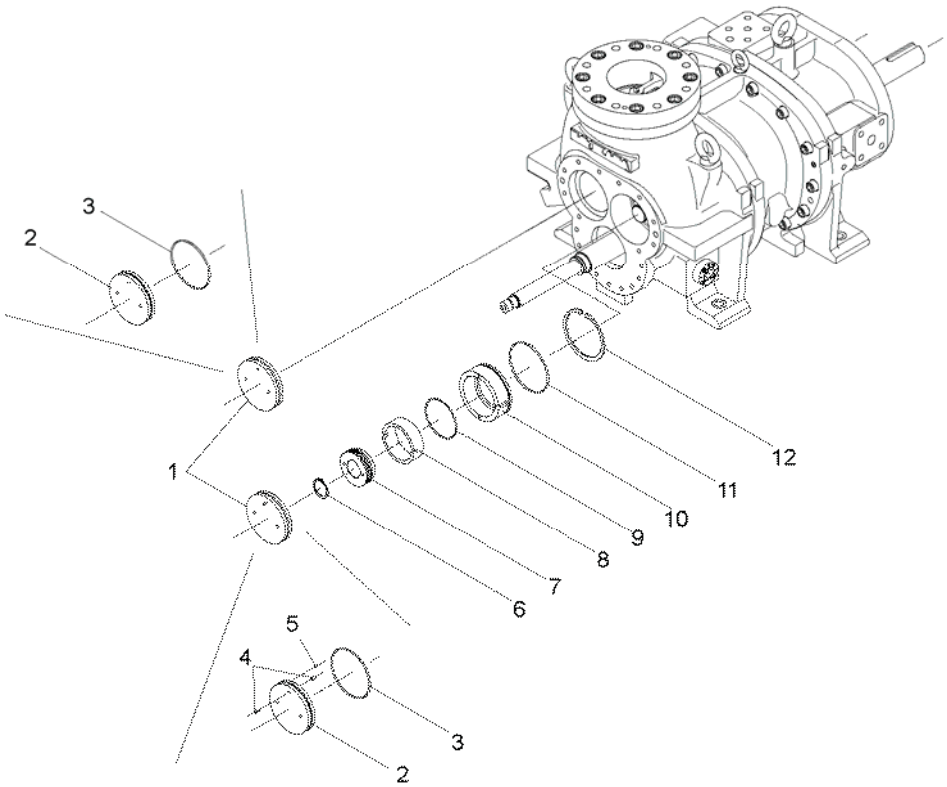

Order	Description	Part No.	Order	Description	Part No.
1	Inner cover assembly, balance piston cover	—	7	Balance piston	30
2	Inner cover, balance piston cover	734	8	Sleeve, balance piston	33
3	O-ring (G115)	23	9	O-ring (G90)	35-1
4	Spring pin (6 dia.×12)	34-1	10	Housing, balance piston	36
5	Spring pin (3 dia.×10)	34-2	11	O-ring (G115)	35-2
6	Retaining ring (S40)	32	12	Retaining ring (H120)	37

1. Remove the parts in the order of the numbers shown in the figure.

2. Install the parts in the reverse order of removing.

5.4.11.1 Preparation for Suction Adapter Removal

1. Loosen the hexagon socket head cap screw (M20×50, No. 493) while the suction cover and the main rotor casing are assembled, because it is difficult to hold by hand the suction cover separately while loosening the hexagon socket head cap screw.

5.4.11.2 Precautions for Removal

■ Balance piston cover inner cover

1. Using eyebolts (M8), remove the balance piston cover inner cover.

【POINT】

- The balance piston cover inner cover on the male rotor side is attached with the spring pins (6 dia.×12 No.4 and 3 dia.×10. No.5). It is not necessary to remove these spring pins from the balance piston cover inner cover.

Bowman Refrigeration 206-706-3033

■ **Retaining ring**

⚠ CAUTION

- **The retaining ring may jump out, causing injuries. Always use retaining ring pliers of appropriate size and wear protective goggles.**

■ **Balance piston**

1. Using eyebolts (M8), remove the balance piston with the balance piston sleeve.

■ **Balance piston housing**

1. Using eyebolts (M8), remove the balance piston housing.

5.4.11.3 Precautions for Installation

■ **O-ring**

1. Make sure that all necessary O-rings are attached.

■ **Retaining ring**

⚠ CAUTION

- **The retaining ring may jump out, causing injuries. Always use retaining ring pliers of appropriate size and wear protective goggles.**

■ **Balance piston housing**

1. The large cutout of the balance piston housing must face the right side when installing into the suction cover. Align the large cutout with the oil supplied port on the right side of the suction cover.

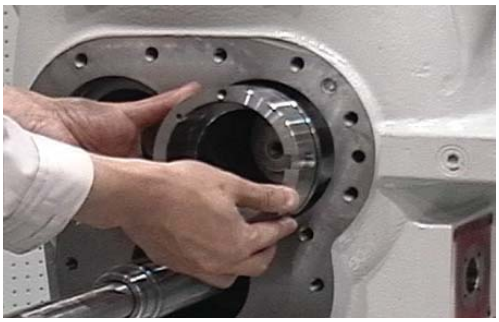

■ **O-ring (G90)**

1. Attach the O-ring (G90) to the rear end of the inside balance piston housing by expanding it so that there is no slack.

■ **Balance piston sleeve**

1. Install the balance piston sleeve into the balance piston housing so that the right and left cutouts line up horizontally.

【POINT】

- When installing the balance piston sleeve, do not jam the O-ring (G90) between the balance piston sleeve and the inner face of the balance piston housing.

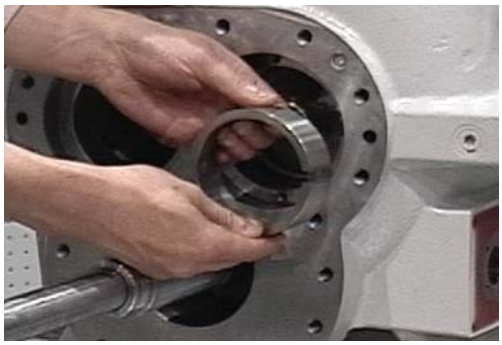

Bowman Refrigeration 206-706-3033

■ Balance piston

1. Install the balance piston onto the shaft by aligning the keyway to the key on the male rotor shaft

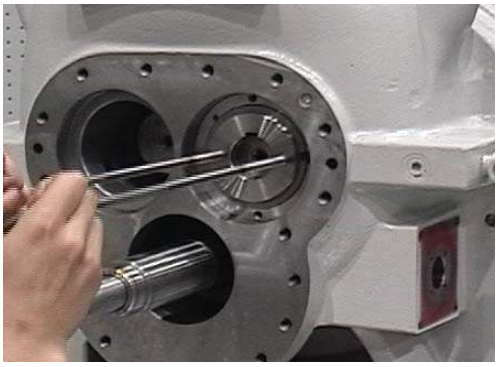

■ Retaining ring

⚠ CAUTION

- **The retaining ring may jump out, causing injuries. Always use retaining ring pliers of appropriate size and wear protective goggles.**

■ Spring pin

1. Check for wear and damages. If anything wrong is found, replace with new spring pin.

■ Balance piston cover inner cover (male rotor side)

1. Install the balance piston inner cover into the suction cover aligning the spring pin (6 dia.×12) the cutout on the balance piston sleeve and the other spring pin(3 dia.×10) to the groove on the balance piston housing.

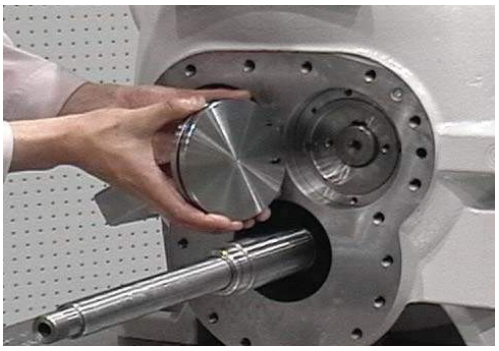

Bowman Refrigeration 206-706-3033

5.4.12 Bearing Head

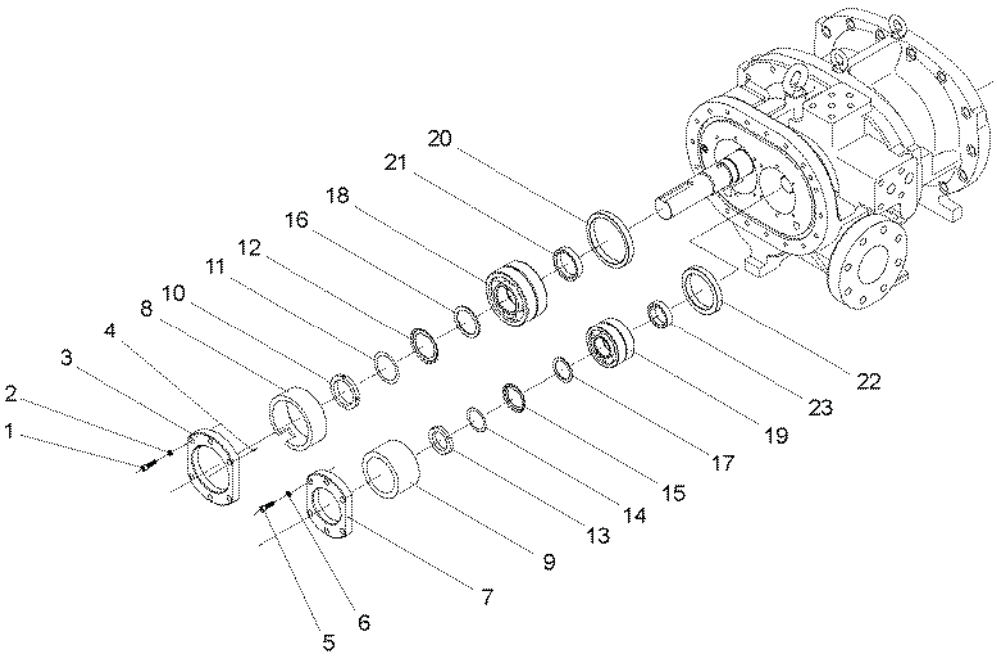

Order	Description	Part No.
1	Hexagon socket head cap screw (M8×30)	45
2	Spring lock washer	46
3	Thrust bearing gland, male rotor	43-1
4	Spring pin (3 dia.×10)	729
5	Hexagon socket head cap screw (M8×30)	45
6	Spring lock washer	46
7	Thrust bearing gland, female rotor	43-2
8	Thrust bearing gland spacer, male rotor	44-1
9	Thrust bearing gland spacer, female rotor	44-2
10	Locknut (AN12)	39-1
11	Torsional slip washer (160)	237-1
12	Lock washer (AW12)	40-1

Order	Description	Part No.
13	Locknut (AN09)	39-2
14	Torsional slip washer (125)	237-2
15	Lock washer (AW09)	40-2
16	Thrust washer, male rotor	250-1
17	Thrust washer, female rotor	250-2
18	Thrust bearing assembly, male rotor	38-1
19	Thrust bearing assembly, female rotor	38-2
20	Bearing spacer, male rotor	41-1
21	Spacer, thrust bearing alignment male rotor	42-1
22	Bearing spacer, female rotor	41-2
23	Spacer, thrust bearing alignment female rotor	42-2

1. Remove the parts in the order of the numbers shown in the figure.

2. Install the parts in the reverse order of removing.

5.4.12.1 Precautions for Removal

■ Thrust bearing gland

1. Protect the part of the male rotor where the mechanical seal is installed from being damaged by using a curing tape.

Bowman Refrigeration 206-706-3033

■ Locknuts M and F / torsional slip washers (160 and 125) / lock washers M and F

1. Using a screwdriver, bend back the claw of the lock washer.

■ Thrust bearing assembly for male rotor / thrust bearing assembly for female rotor

【POINT】

- If the thrust bearings cannot be removed by hand, use the thrust bearing pulling tool. Take care not to damage the inner and outer rings, balls and retainers of the thrust bearings.

5.4.12.2 Precautions for Installation

■ Bearing spacers for male and female rotors / thrust bearing alignment spacers for male and female rotors

【POINT】

- The bearing spacers and thrust bearing alignment spacers have a stamped mark of M or F.

1. When installing the bearing spacers and thrust bearing alignment spacers, direct the upper side of the stamped letter toward the machine.

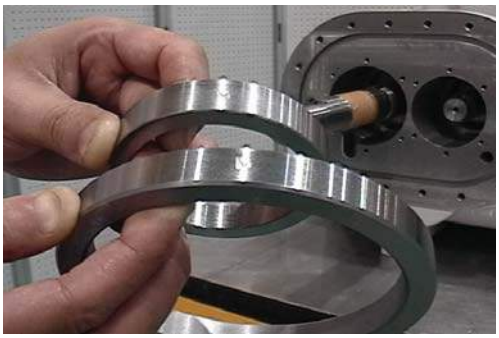

■ Locknuts M and F / torsional slip washers (160 and 125) / lock washers M and F

【POINT】

- If the locknut is tightly fastened and the rotor is not able to rotate, it secures no end clearance and the thrust bearing will be damaged.
- If no end clearance is secured, do not tighten the locknut further and replace the thrust bearing alignment spacer or insert a shim of appropriate thickness between the thrust bearing alignment spacer and the inner race of the thrust bearing to secure appropriate end clearance.
- For further details, refer to “5.4.20 Adjustment of End Clearance”.

1. Align the lock washer claw to the locknut groove and bend the lock washer claw using a screwdriver.

■ Spring pin

1. Check for wear and damages. If anything wrong is found, replace with new spring pin.

Bowman Refrigeration 206-706-3033

■ Thrust bearing gland spacer for male rotor

1. Face the opening of cutout on the male rotor thrust bearing gland spacer to the worker. When installing the male rotor thrust bearing gland spacer into the bearing head, align the cutout with the drain groove on the bearing head.

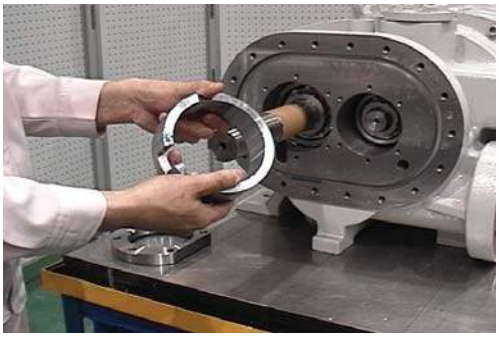

■ Thrust bearing gland for male rotor

1. Align the two spring pins of the thrust bearing gland on depression face for male rotor with the cutout of the thrust bearing gland spacer for male rotor and install the thrust bearing gland male rotor to the bearing head.

■ Hexagon socket head cap screw (M8×30)/spring lock washer (M8)

1. The spring lock washer must be attached after adjustment of end clearance.

2. Tighten the hexagon socket head cap screw (M8×30) evenly and lightly using a wrench.

3. For further details, refer to "5.4.20 Adjustment of End Clearance".

Bowman Refrigeration 206-706-3033

5.4.13 Separation of Suction Cover and Main Rotor Casing

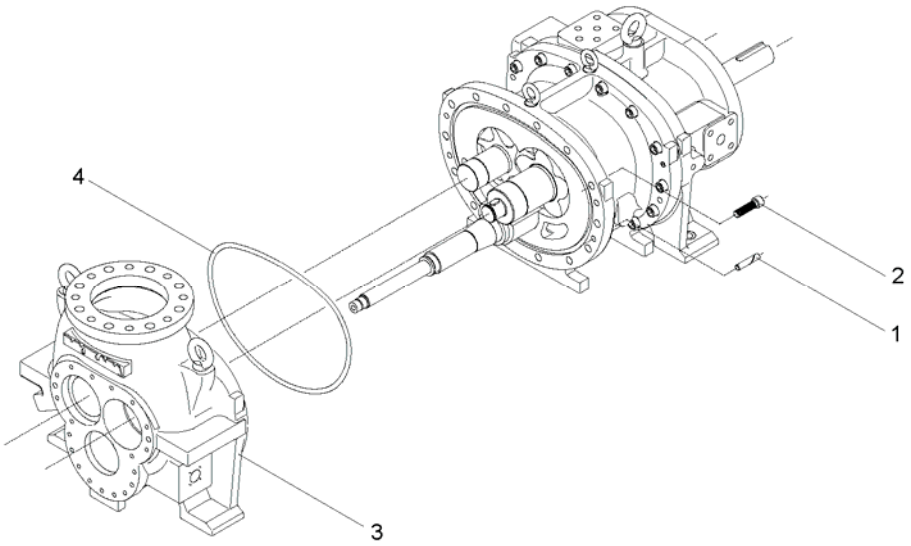

Order	Description	Part No.
1	Parallel pin(13 dia.×65)	3
2	Hexagon socket head cap screw (M16×60)	2

Order	Description	Part No.
3	Suction cover	5
4	O-ring (P375)	6

1. Remove the parts in the order of the numbers shown in the figure.

2. Install the parts in the reverse order of removing.

5.4.13.1 Precautions for Removal

■ **Suction cover**

⚠ CAUTION

- **If the lifting equipment and lifting slings in use do not have sufficient loading capacity, the suction cover may fall causing injuries and damage to the compressor. Before starting the lifting work, always check that the lifting equipment and lifting slings have sufficient loading capacity. Do not allow anyone to be under the suction cover. (Suction cover weight: 142 kgf)**

1. Using appropriate tools, remove the parallel pin.

2. Insert bolts into the service holes, tighten the bolts, and separate the suction cover and the main rotor casing flange face evenly.

3. Pull out the suction cover being careful not to damage the push rod.

【POINT】

- Before separating the suction cover from the main rotor casing, loosen the suction adapter fixing bolts (M20×50) on the suction cover.
- When separating the suction cover from the main rotor casing, do not remove the suction cover with the rotors.
- If it is difficult to separate the suction cover from the main rotor casing, lift the main rotor casing slightly using a crowbar while removing the suction cover.

Bowman Refrigeration 206-706-3033

5.4.13.2 Precautions for Installation

■ **Suction cover**

CAUTION

- **If the lifting equipment and lifting slings in use do not have sufficient loading capacity, the suction cover may fall causing injuries and damage to the compressor. Before starting the lifting work, always check that the lifting equipment and lifting slings have sufficient loading capacity. Do not allow anyone to be under the suction cover. (Suction cover weight: 142 kgf)**

■ **O-ring (P375)**

1. After disassembly, replace the existing O-rings with new ones.

Bowman Refrigeration 206-706-3033

5.4.14 Suction Cover

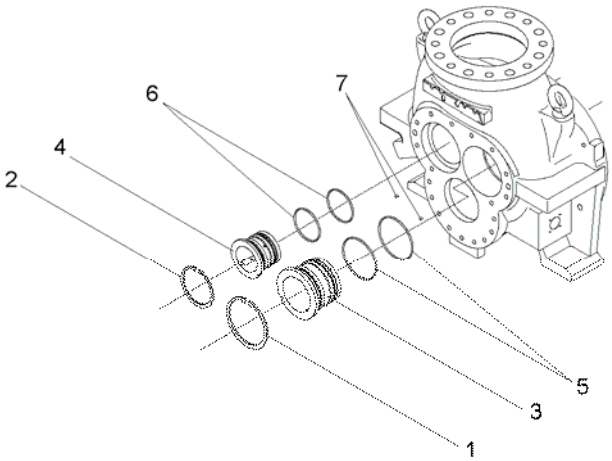

Order	Description	Part No.
1	Retaining ring (H120)	29-1
2	Retaining ring (H95)	29-2
3	Bearing, male rotor	27
4	Bearing, female rotor	28

Order	Description	Part No.
5	O-ring (G100)	432
6	O-ring (G75)	433
7	Spring pin (4 dia.×10)	14

1. Remove the parts in the order of the numbers shown in the figure.
2. Install the parts in the reverse order of removing.

5.4.14.1 Precautions for Removal

■ **Retaining ring**

⚠ CAUTION

- **The retaining ring may jump out, causing injuries. Always use retaining ring pliers of appropriate size and wear protective goggles.**

■ **Bearing**

1. Remove the bearing using the radial bearing installing tool.

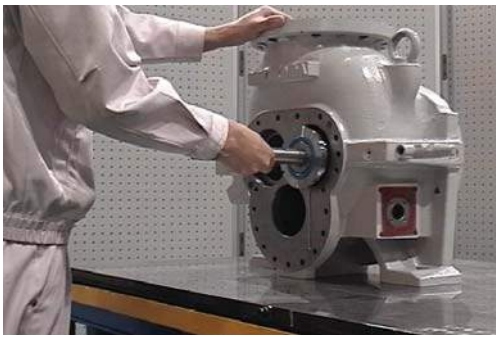

Bowman Refrigeration 206-706-3033

5.4.14.2 Precautions for Installation

■ **Spring pin**

1. Check for wear and damages. If anything wrong is found, replace with new spring pin.

■ **Bearing**

1. Lubricate the bearing face on the suction cover with refrigerant oil.

2. Insert the guide to the spring pin (4 dia.×10) and align the cutout of the bearing to the guide.

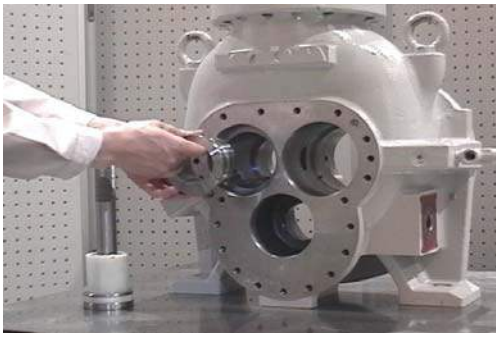

3. Install the bearing using the radial bearing installing tool.

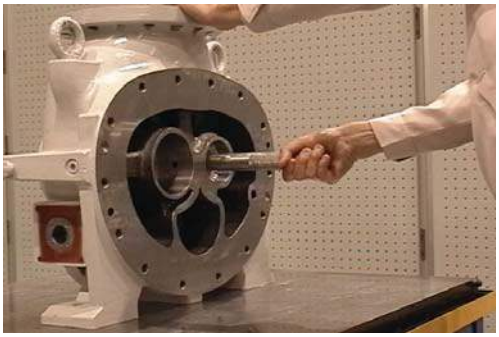

■ **Retaining ring**

⚠ CAUTION

- **The retaining ring may jump out, causing injuries. Always use retaining ring pliers of appropriate size and wear protective goggles.**

Bowman Refrigeration 206-706-3033

5.4.15 Rotor

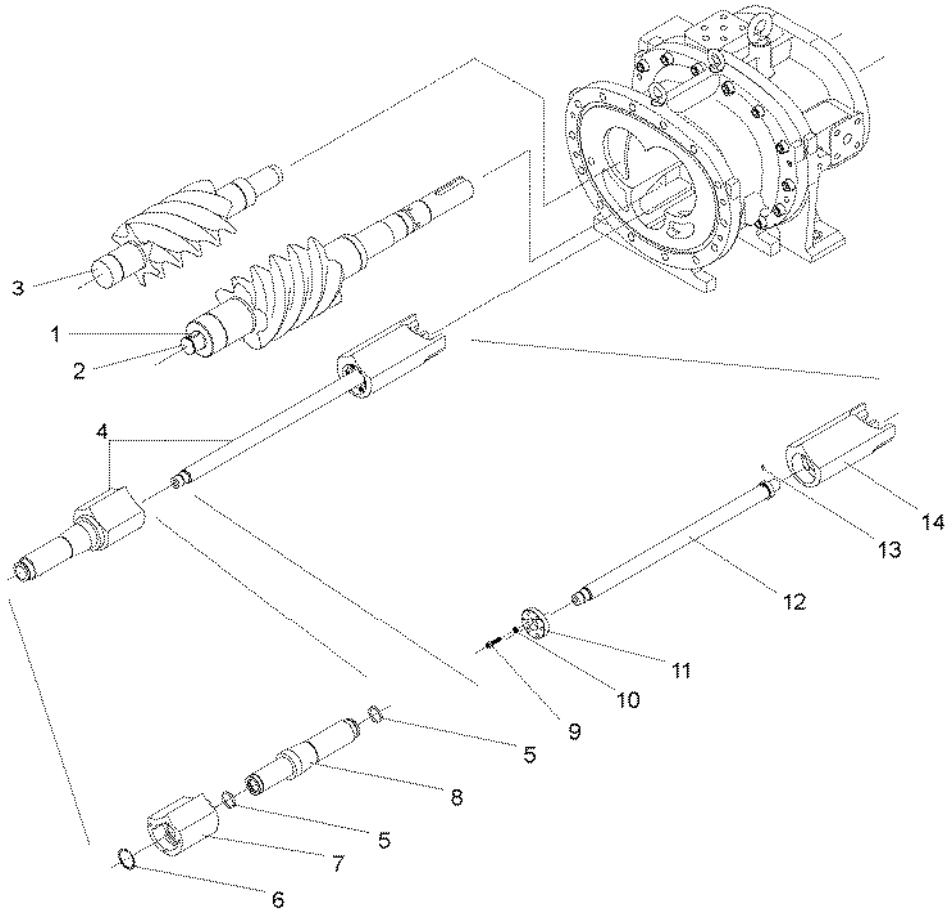

Order	Description	Part No.	Order	Description	Part No.
1	Key for balance piston	31	8	Push rod, Vi	292
2	Male rotor	25	9	Hexagon socket head cap screw (M8×30)	58
3	Female rotor	26	10	Spring lock washer	267
4	Unloader slide valve assembly and slide valve assembly, Vi	–	11	Gland, push rod for unloader slide valve	451
5	O-ring (P32)	325-1	12	Unloader push rod	67
6	Spiral retaining ring	293	13	Grooved pin	446
7	Slide valve, Vi	289	14	Unloader slide valve	54

1. Remove the parts in the order of the numbers shown in the figure.

2. Install the parts in the reverse order of removing.

Bowman Refrigeration 206-706-3033

5.4.15.1 Precautions for Removal

■ **Male rotor and female rotor**

⚠ CAUTION

- **The male rotor weights 37 kgf for 170JS, 44 kgf for 170M, and 52 kgf for 170JL. The female rotor weights 19 kgf for 170JS, 23 kgf for 170M, and 28 kgf for 170JL. If lifted inappropriately, it may cause injuries. When lifting the male rotor or female rotor use the lifting equipment, and make sure to adopt an appropriate method such as using lifting slings.**
- **If the lifting equipment and lifting slings in use do not have sufficient loading capacity, the male rotor or female rotor may fall causing injuries and damage to the compressor. Before starting the lifting work, always check that the lifting equipment and lifting slings have sufficient loading capacity. Do not allow anyone to be under the lifted male rotor or female rotor.**

CAUTION

- **Do not damage the rotor, the casing, or the bearing when pulling the rotors out. Suspend the rotors and pull them out horizontally**

■ **Unloader slide valve assembly and Vi slide valve assembly**

⚠ CAUTION

- **The unloader slide valve assembly weights 10 kgf for 170S, 12 kgf for 170M and 13 kgf for 170JL and the Vi slide valve assembly weights 7 kgf for 170JS, 7.5 kgf for 170JM or 7.8 kgf for 170JL. If lifted inappropriately, it may cause injuries. If it is difficult to lift them by hand, use appropriate lifting equipment.**

■ **Spiral retaining ring**

⚠ CAUTION

- **Do not extend the spiral retaining ring excessively in the circumferential direction. If extended excessively in the circumferential direction, it may cause injuries.**

5.4.15.2 Precautions for Installation

■ **Unloader push rod**

1. Install the unloader push rod (Part No. 67) into the unloader slide valve (Part No. 54) with the grooved pin (Part No. 446) facing upward.

■ **Push rod gland for unloader slide valve**

1. When installing the push rod gland for unloader slide valve (No. 451) into the unloader slide valve (No. 54), align the cutout of the push rod gland with the grooved pin (No. 446) in the unloader slide valve push rod.

Bowman Refrigeration 206-706-3033

■ Spiral retaining ring

⚠ CAUTION

- **Do not extend the spiral retaining ring excessively in the circumferential direction. If extended excessively in the circumferential direction, it may cause injuries.**

【POINT】

- If the spiral retaining ring is deformed or damaged, replace it with a new one.

■ Male rotor and female rotor

⚠ CAUTION

- **The male rotor weights 37 kgf for 170JS, 44 kgf for 170M, and 52 kgf for 170JL. The female rotor weights 19 kgf for 170JS, 23 kgf for 170M, and 28 kgf for 170JL. If lifted inappropriately, it may cause injuries. When lifting the male rotor or female rotor use the lifting equipment, and make sure to adopt an appropriate method such as using lifting slings.**
- **If the lifting equipment and lifting slings in use do not have sufficient loading capacity, the male or female rotor may fall causing injuries and damage to the compressor. Before starting the lifting work, always check that the lifting equipment and lifting slings have sufficient loading capacity. Do not allow anyone to be under the lifted male or female rotor.**

CAUTION

- **Do not damage the rotors, the casing or bearing, when installing the rotors.**

1. Inspect the rotors for dents or scratches.
2. Using lifting slings, lift the female rotor horizontally and maintain the horizontal equilibrium.
3. Install the female rotor into the main rotor casing.
4. Using lifting slings, lift the male rotor horizontally and maintaining the horizontal equilibrium.
5. Engage the male rotor to the female rotor and push them into the main rotor casing.

【POINT】

- The male rotor and female rotor can be engaged at any orientation.

■ Key for balance piston

1. Check for wear and damages. If anything wrong is found, replace the key.

Bowman Refrigeration 206-706-3033

5.4.16 Separation from Bearing Head

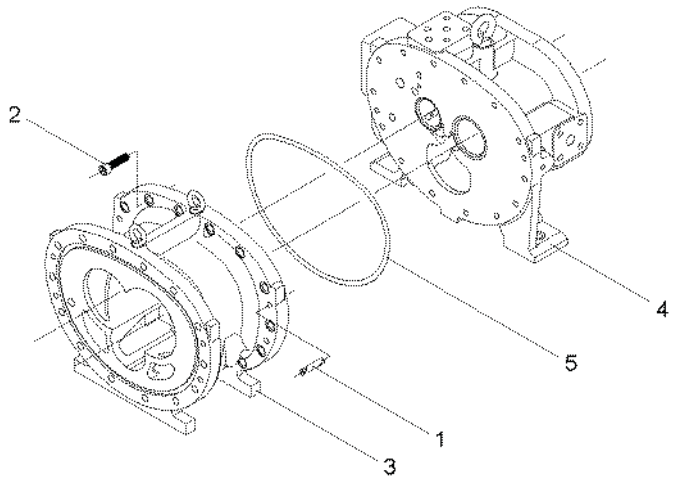

Order	Description	Part No.
1	Parallel pin(13 dia.×65)	3
2	Hexagon socket head cap screw (M16×50)	2
3	Main rotor casing	1

Order	Description	Part No.
4	Bearing head	11
5	O-ring (P375)	12

1. Remove the parts in the order of the numbers shown in the figure.
2. Install the parts in the reverse order of removing.

5.4.16.1 Precautions for Removal

1. Remove the parallel pin using an appropriate tool.
2. Insert bolts into the service holes, tighten the bolts, and separate the bearing head and the main rotor casing flange face evenly.

5.4.16.2 Lifting of Bearing Head

⚠ CAUTION

- **Make sure that the lifting equipment and wires have sufficient loading capacity for the compressor. Otherwise, the bearing head may fall, resulting in injuries and damage to the compressor. Before lifting the compressor, always check that the lifting equipment and wires have sufficient loading capacity. Do not allow anyone to be under the lifted bearing head. (Bearing head weight: 168 kgf)**

1. Using the one eyebolt (M20) on the top of the bearing head, lift and carry the bearing head with lifting equipment.

Bowman Refrigeration 206-706-3033

5.4.16.3 Lifting of Main Rotor Casing

⚠ CAUTION

- **Make sure that the lifting equipment and wires have sufficient loading capacity for the compressor. Otherwise, the main rotor casing may fall, resulting in injuries and damage to the compressor. Before lifting the compressor, always check that the lifting equipment and wires have sufficient loading capacity. Do not allow anyone to be under the lifted main rotor casing.**
  (Main rotor casing weight: 101 kgf for 170JS, 107 kgf for 170JM, 132 kgf for 170JL)

1. Using the two eyebolts (M12) on the top of the main rotor casing, lift and carry the main rotor casing with lifting equipment.

5.4.16.4 Precautions for Installation

■ **O-ring (P375)**

1. After disassembly, replace the existing O-rings with new ones.

Bowman Refrigeration 206-706-3033

5.4.17 Bearing Head

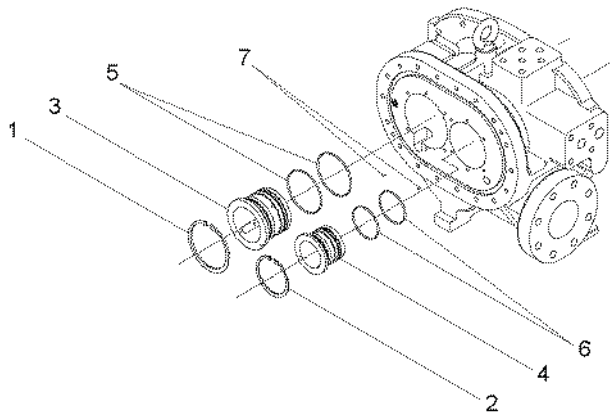

Order	Description	Part No.
1	Retaining ring (H120)	29-1
2	Retaining ring (H95)	29-2
3	Bearing, male rotor	27
4	Bearing, female rotor	28

Order	Description	Part No.
5	O-ring (G100)	432
6	O-ring (G75)	433
7	Spring pin (4 dia.×10)	14

1. Remove the parts in the order of the numbers shown in the figure.
2. Install the parts in the reverse order of removing.

5.4.17.1 Precautions for Removal

■ **Retaining ring**

CAUTION

- **The retaining ring may jump out, causing injuries. Always use retaining ring pliers of appropriate size and wear protective goggles.**

■ **Bearing**

1. Remove the bearing using the radial bearing installing tool.

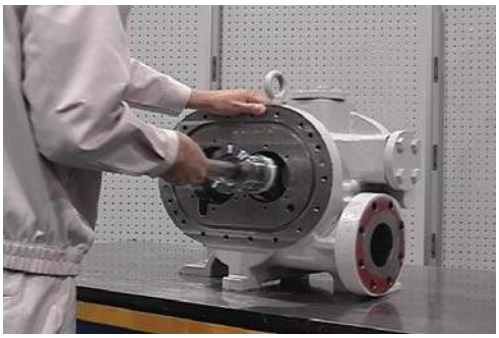

5.4.17.2 Precautions for Installation

■ **Spring pin**

1. Check for wear and damages. If anything wrong is found, replace with new spring pin.

Bowman Refrigeration 206-706-3033

■ Bearing

1. Lubricate the bearing face of the bearing head with refrigerant oil.

2. Insert the guide to the spring pin (4 dia.×10) and align the cutout of the bearing to the guide.

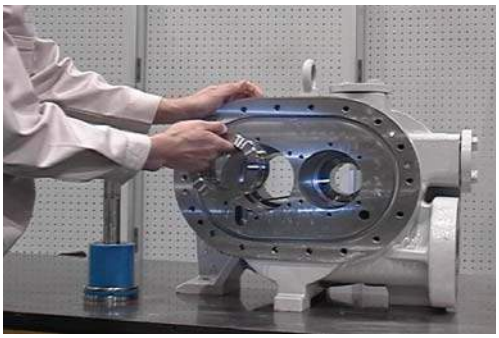

3. Install the bearing using the radial bearing installing tool.

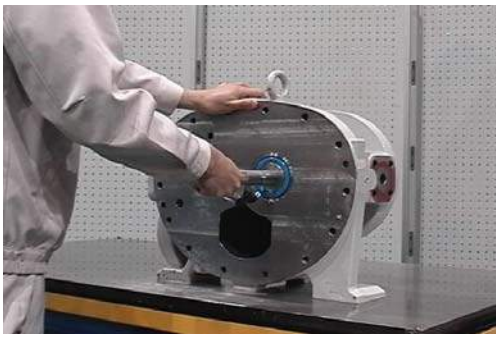

■ Retaining ring

⚠ CAUTION

- **The retaining ring may jump out, causing injuries. Always use retaining ring pliers of appropriate size and wear protective goggles.**

Bowman Refrigeration 206-706-3033

5.4.18 Suction Adapter

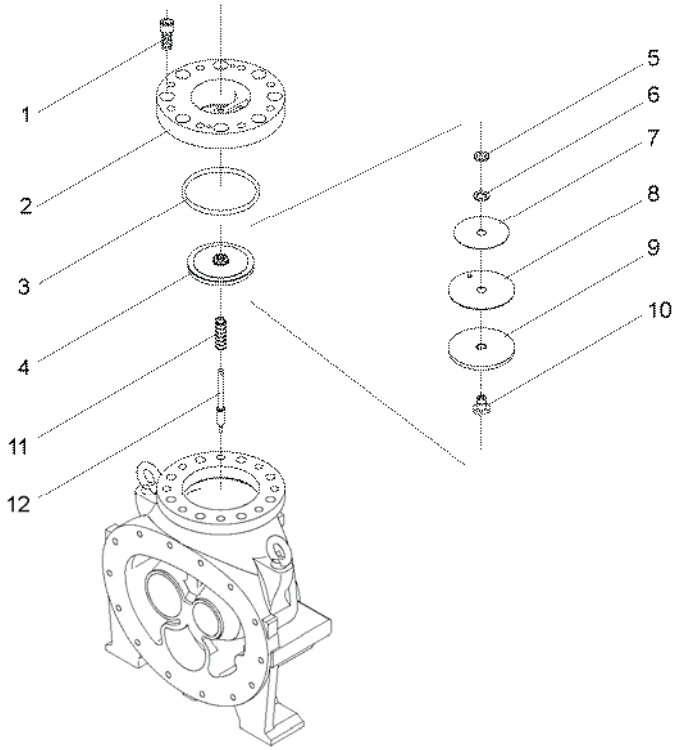

Order	Description	Part No.	Order	Description	Part No.
1	Hexagon socket head cap screw (M20×50)	493	7	Sheet stopper	488
2	Suction adapter	492	8	Valve sheet	489
3	O-ring (P155)	494	9	Valve disc	490
4	Valve disc assembly	–	10	Check valve slider	481
5	FU nut (FU04SS)	486	11	Spring, check valve	485
6	Plain washer	487	12	Check valve stem	491

1. Remove the parts in the order of the numbers shown in the figure.

2. Install the parts in the reverse order of removing.

5.4.18.1 Precautions for Removal

■ Hexagon socket head cap screw (M20×50)

1. Before separating the suction cover from the main rotor casing, loosen the hexagon socket head cap screws (M20×50 No. 493).

■ Suction adapter

1. Using eyebolts (M8), remove the suction adapter.

⚠ CAUTION

- **The suction adapter weights 14 kgf. If lifted inappropriately, it may cause injuries. If it is difficult to lift the suction adapter by hands, use lifting equipment.**

Bowman Refrigeration 206-706-3033

■ **FU nut**

【POINT】

- The FU nut has a high friction locking device. Turn the FU nut with a locknut wrench until it is loosened.

5.4.18.2 Precautions for Installation

■ **FU nut**

【POINT】

- The FU nut has a high friction locking device. Turn the FU nut with a locknut wrench when tightening the FU nut.

■ **Suction adapter**

1. Install the suction adapter into the suction cover so that the adapter plate stem supporting the check valve stem orients in the thrust direction.

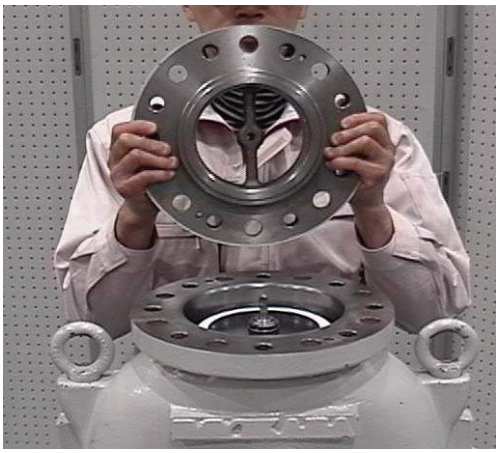

CAUTION

- **The suction adapter weights 14 kgf. If lifted inappropriately, it may cause injuries. If it is difficult to lift the suction adapter by hand, use lifting equipment.**

■ **Hexagon socket head cap screw (M20×50)**

1. Apply liquid gasket to the suction adapter tightening bolts. (This is to prevent water entry and freezing. Silicon grease is allowable.)

2. Install the bolts to the suction cover and tighten them lightly with a wrench.

3. After connecting the suction cover and the main rotor casing securely, tighten the hexagon socket head cap screws (M20×50) on the suction cover to the specified torque.

Bowman Refrigeration 206-706-3033

5.4.19 Unloder Slide Valve Guide

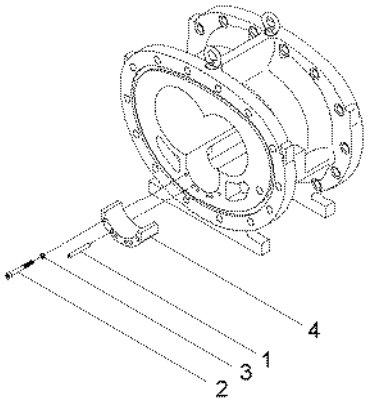

Order	Description	Part No.	Order	Description	Part No.
1	Parallel pin	249	3	Spring lock washer	248
2	Hexagon socket head cap screw (M8×70)	247	4	Guide, unloader slide valve	246

1. Remove the parts in the order of the numbers shown in the figure.

2. Install the parts in the reverse order of removing.

CAUTION

- **For periodic inspection, do not remove the unloader slide valve guide.**

Bowman Refrigeration 206-706-3033

5.4.20 Adjustment of End Clearance

1. Rotate the male rotor clockwise several turns.
2. Press the end face of male rotor on a suction side securely.
3. Attach the point of a dial gauge on the suction cover side end face of the male rotor.
4. Reset the dial gauge scale to 0.
5. Using a torque wrench, tighten the hexagon socket head cap screws (M8×30) for thrust gland diagonally little by little and finally tighten them to the specified torque.
6. Check if the dial gauge reading falls in the specified range.

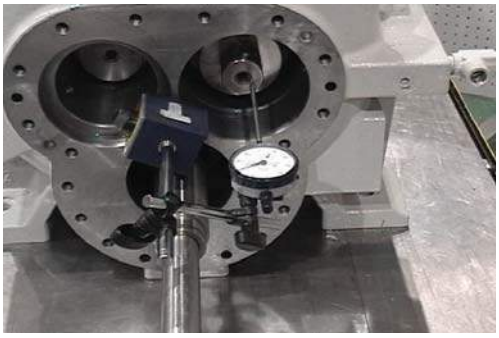

Specified range: 0.04 - 0.06

If a surface grinder machine can be used.

1) If the dial gauge reading is larger than the specified range, grind the face of the thrust alignment spacer M to within the specified value.

2) If the dial gauge reading is smaller than the specified range, grind the face of the bearing spacer M to within the specified value.

If a surface grinder machine cannot be used.

1) If the dial gauge reading is larger than the specified range, a shim of the required thickness must be inserted between the thrust spacer M and the outer race of the thrust bearing M.

2) If the dial gauge reading is smaller than the specified range, a shim of the required thickness must be inserted between the bearing spacer M and the inner race of the thrust bearing M.

7. Rotate the male rotor counterclockwise several turns.
8. Press the end face of female rotor on suction side securely.
9. Attach the point of a dial gauge to the suction cover-side end face of the female rotor.
10. Reset the dial gauge scale to 0.
11. Using a torque wrench, tighten the hexagon socket head cap screws (M8×30) for thrust gland diagonally little by little and finally tighten them to the specified torque.
12. Check if the dial gauge reads the specified range.

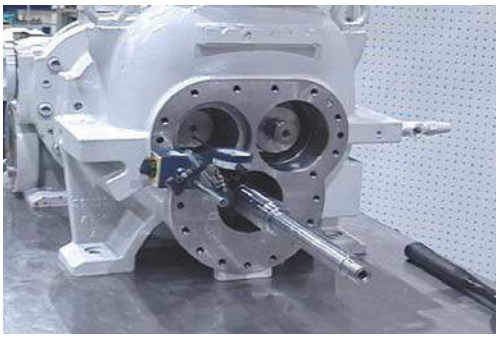

Specified range : 0.04 - 0.06

If a surface grinder machine can be used.

1) If the dial gauge reading is larger than the specified range, grind the face of the thrust alignment spacer F to within the specified value.

2) If the dial gauge reading is smaller than the specified range, grind the face of the bearing spacer F to within the specified value.

If a surface grinder machine cannot be used.

1) If the dial gauge reading is larger than the specified range, a shim of the required thickness must be inserted between the thrust spacer F and the outer race of the thrust bearing F.

2) If the dial gauge reading is smaller than the specified range, a shim of the required thickness must be inserted between the bearing spacer F and the inner race of the thrust bearing F.

Bowman Refrigeration 206-706-3033

CAUTION

- **When grinding the thrust adjustment spacer or the thrust spacer, always use a high accurate surface grinder.**
  After grinding the thrust adjustment spacer or the thrust spacer, measure the thickness around the entire circumference with the micrometer for uniform thickness.

13. After finishing end clearance adjustment, remove one of the hexagon socket head cap screw (M8×30) of the thrust bearing gland for the male rotor, attach a spring lock washer to the hexagon socket head cap screw, and then reattach and tighten the hexagon socket head cap screw to the specified torque.

14. Repeat this work for all hexagon socket head cap screws of the thrust bearing gland for the male rotor in a star pattern.

15. Perform the same operation to the hexagon socket head cap screws (M8×30) of the thrust bearing gland for the female rotor.

Bowman Refrigeration 206-706-3033

5.4.21 Inspection for Runout Male Rotor Shaft

1. Mount a dial gauge on the bearing head flange face and attach the point to the seal portion of the male rotor.
2. Check the runout of the seal portion of male rotor shaft by rotating it.

Specification: 0.03/turn or less

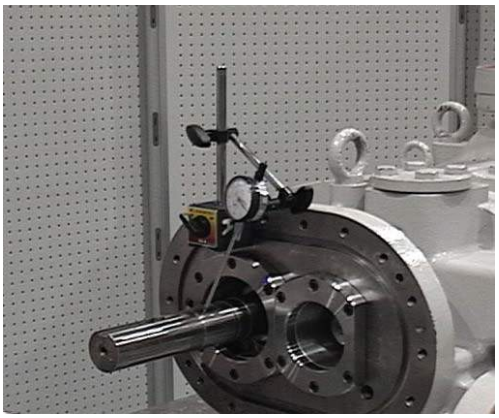

CAUTION

- **If the measured runout is larger than specified, some foreign matters may be jammed between the parts, the locknut tightening torque may be excessive, or the accuracy of parallelism deviation for the thrust adjustment spacer is not satisfactory. Disassemble the parts and inspect the thrust adjustment spacer, thrust spacer, thrust bearing, and locknut to eliminate any possible causes. Do not tighten the locknut fully in one cycle. Tighten it evenly several times while changing the combination of engagement between tightening tool claw and locknut groove.**

Bowman Refrigeration 206-706-3033

5.4.22 Inspection for Runout of Seal Cover Mount Face (Bearing Cover)

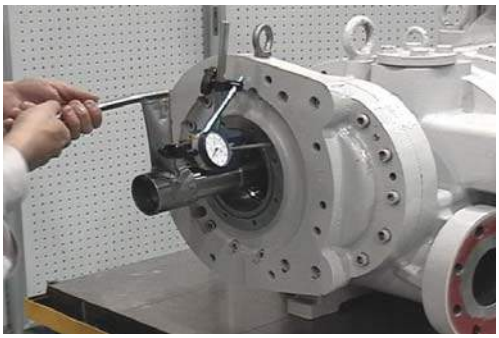

1. Mount a dial gauge to the shaft of the male rotor and attach the point on the flange face of bearing cover.
2. Check the runout of the seal cover mount face for the bearing cover by rotating the male rotor shaft.

   Specification: 0.03/turn or less

CAUTION

- **If the measured runout is larger than specified, some foreign matters may be jammed between the parts, or the locknut tightening torque may be excessive, or the accuracy of parallelism deviation for the thrust adjustment spacer is not satisfactory. Disassemble the parts and inspect the thrust adjustment spacer, thrust spacer, thrust bearing, and locknut to eliminate any possible causes. Do not tighten the locknut fully in one cycle. Tighten it evenly several times while changing the combination of engagement between tightening tool claw and locknut groove.**

Bowman Refrigeration 206-706-3033

6 Troubleshooting

6.1 Troubleshooting

No.	Trouble	Causes	Actions
1	Supply oil pressure drops	1) Clogging of oil filter	• Replace filter element/
		2) Valve in the supply oil line closed	• Open valve.
2	Abnormally high discharge pressure	1) Contamination of cooling pipe	• Clean cooling pipe for cooling water side.
		2) Insufficient cooling water flow	• Add cooling water to cooling tower. • Clogging of cooling water filter
		3) High cooling water temperature	• Insufficient capacity of cooling tower
		4) Refrigerant charge is excessive.	• Adjust refrigerant amount (refrigerant liquid level in condenser).
		5) Discharge valve closed	• Open discharge valve.
		6) Non-condensable gases in the system	• Purge any non-condensable gas from condenser • Check suction line for leakage.
3	Abnormally high discharge temperature	1) Suction superheat too high	• Adjust expansion valve. • Check cooling load.
		2) Non-condensable gases in the system	• Purge any non-condensable gas from condenser
		3) High supply oil temperature	• Remove causes for insufficient cooling performance of oil cooler.
		4) Insufficient supply oil	• Check oil filter. • Oil foaming due to refrigerant dissolve in oil excessively
4	Motor protection switch activated (Motor overheat)	1) Voltage drop	• Check and improve power supply system.
		2) Motor overload	• Check cooling load. • Set upper limit to capacity control.
5	Abnormal noises from compressor	1) Refrigerant liquid returns	• Adjust supply refrigerant flow rate to evaporator, liquid injection, and economizer.
		2) Foreign substance in compressor	• Check suction strainer and oil filter. • Overhaul compressor.
		3) Bearing damage	• Overhaul compressor. • Confirm and eliminate causal factors.
6	Unloader slide valve and Vi slide valve not moving	1) Coil damage	• Replace coil.
		2) The opening of adjusting valve is too small	• Adjust valve opening appropriately.
		3) Refrigerant gas retention in cylinder	• Stop compressor. Operate oil pump and repeat loading and unloading to purge gas from cylinder.

Note: The contents described above are based on standard packages..

Bowman Refrigeration 206-706-3033

Bowman Refrigeration 206-706-3033

7 Related Documents

7.1 Development View and Configuration Table of the Parts

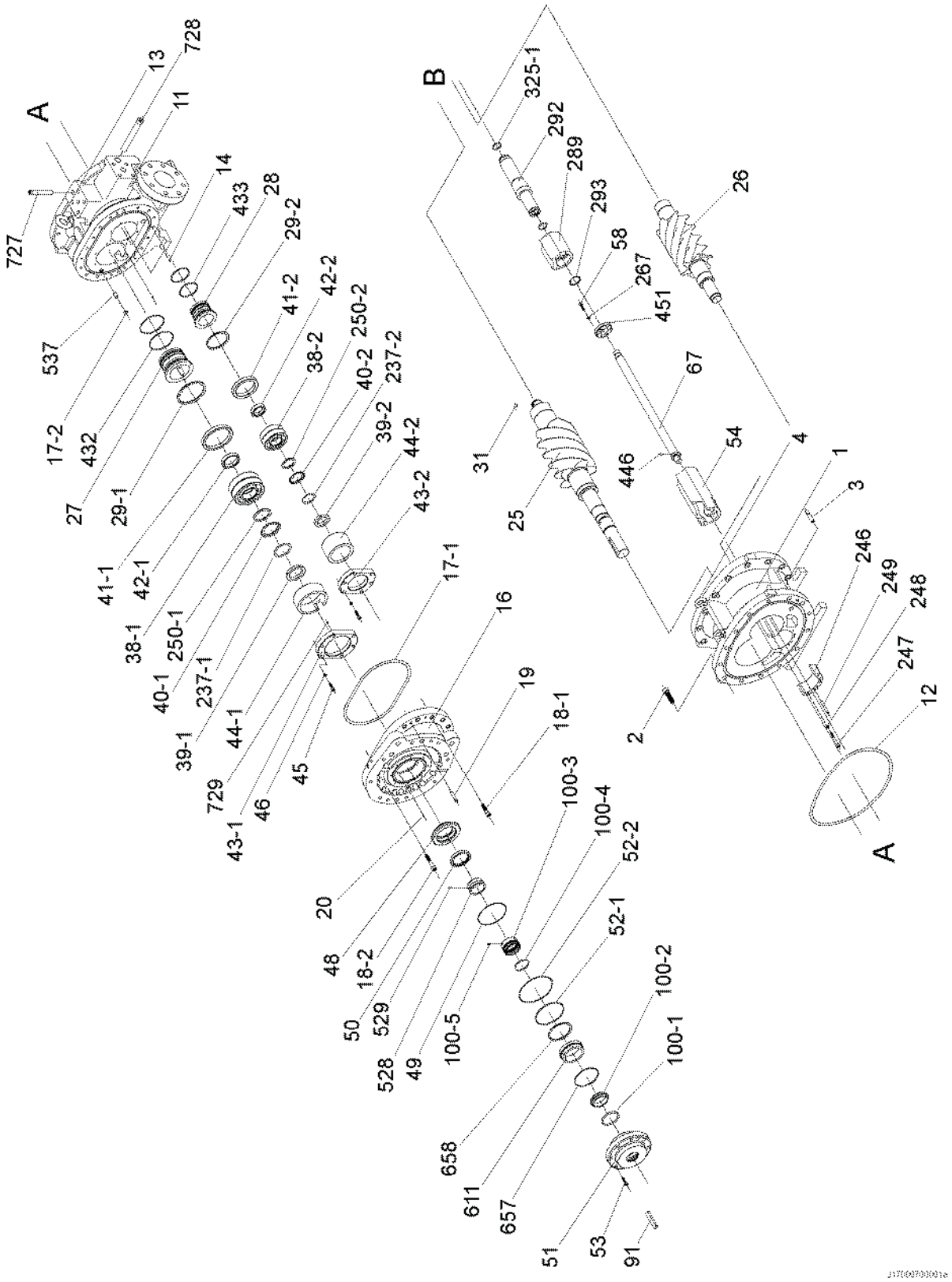

Figure7-1Development View (1/2)

Bowman Refrigeration 206-706-3033

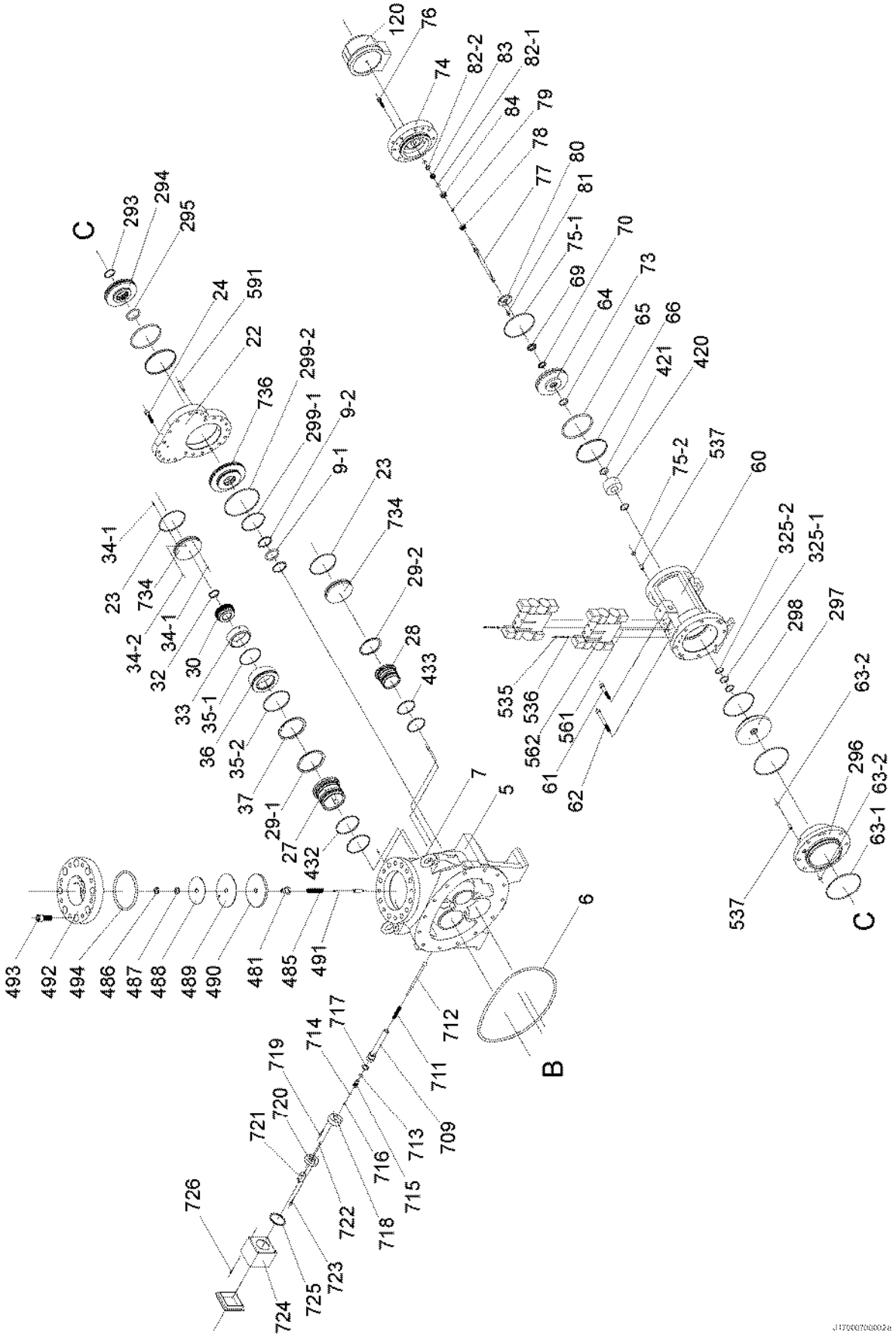

Figure7-2Development View (2/2)

Bowman Refrigeration 206-706-3033

Table 7-1 Configuration table of the parts

Part No.	Part name	Type	Part code No.	Quantity/unit		
				S	M	L
1	Main rotor casing S			1	—	—
	Main rotor casing M			—	1	—
	Main rotor casing L			—	—	1
2	Hexagon socket head cap screw	M16×60	NB35416-060	28		
3	Parallel pin	13 dia.x65 with female thread		4		
4	Eyebolt	M12	NB600-12	2		
5	Suction cover			1		
6	O-ring	JIS B 2401 P375	PA11-375	1		
7	Eyebolt	M20	NB600-20	2		
9-1	O-ring	JIS B 2401 P52	PA11-052	1		
9-2	Back-up ring for O-ring	SUN-2BP 52	CS66400-J170	2		
10-A	Plug	R3/8	NF06-010	1		
10-B	Plug	R1/2	NF06-015	1		
10-C	Plug	R1/2	NF06-015	1		
10-D	Plug	R3/8	NF06-010	1		
10-E	Plug	R3/8	NF06-010	1		
11	Bearing head			1		
12	O-ring	JIS B 2401 P375	PA11-375	1		
13	Eyebolt	M20	NB600-20	1		
14	Spring pin	4 dia.×10	NE3204-010	4		
15-A	Plug	R1/4	NF06-008	1		
15-B	Plug	R3/8	NF06-010	1		
16	Bearing cover			1		
17-1	O-ring	JIS B 2401 P300	PA11-300	1		
17-2	O-ring	JIS B 2401 P14	PA11-014	1		
18-1	Hexagon socket head cap screw	M12×50	NB35412-050	5		
18-2	Hexagon socket head cap screw	M12×70	NB35412-070	13		
19	Parallel pin	10 dia.×55 with female thread		2		
20	Spring pin	3 dia.×8	NE3203-008	1		
21	Plug	R1/4	NF06-008	1		
22	Balance piston cover			1		
23	O-ring	JIS B 2401 G115	PA12-115	2		
24	Hexagon socket head cap screw	M12×50	NB35412-050	13		
25	Male rotor S			1	—	—
	Male rotor M			—	1	—
	Male rotor L			—	—	1
26	Female rotor S			1	—	—
	Female rotor M			—	1	—
	Female rotor L			—	—	1
27	Bearing, male rotor	Sleeve bearing	CS02700-J170M	2		
28	Bearing, female rotor	Sleeve bearing	CS02700-J170F	2		
29-1	Retaining ring	JIS B 2804 H120	NG11-120	2		
29-2	Retaining ring	JIS B 2804 H95		2		
30	Balance piston		CS03000-J170	1		
31	Key for balance piston			1		
32	Retaining ring	JIS B 2804 S40	NG12-040	1		
33	Sleeve, balance piston		CS03300-J170	1		
34-1	Spring pin	6 dia.×12	NE3206-012	2		
34-2	Spring pin	3 dia.×10	NE3203-010	1		
35-1	O-ring	JIS B 2401 G90	PA12-090	1		
35-2	O-ring	JIS B 2401 G115	PA12-115	1		
36	Housing, balance piston			1		
37	Retaining ring	JIS B 2804 H120	NG11-120	1		
38-1	Thrust bearing assembly, male rotor	7312BEAXT7DF	CS03800-J170M	1		
38-2	Thrust bearing assembly, female rotor	7309BEAXT7DF	CS03800-J170F	1		
39-1	Locknut	AN12	NG31-012	1		
39-2	Locknut	AN09	NG31-009	1		

Bowman Refrigeration 206-706-3033

Part No.	Part name	Type	Part code No.	Quantity/unit		
				S	M	L
40-1	Lock washer	AW12	NG32-012	1		
40-2	Lock washer	AW09	NG32-009	1		
41-1	Bearing spacer, male rotor			1		
41-2	Bearing spacer, female rotor			1		
42-1	Spacer, thrust bearing alignment male rotor			1		
42-2	Spacer, thrust bearing alignment female rotor			1		
43-1	Thrust bearing gland, male rotor			1		
43-2	Thrust bearing gland, female rotor			1		
44-1	Thrust bearing gland spacer, male rotor			1		
44-2	Thrust bearing gland spacer, female rotor			1		
45	Hexagon socket head cap screw	M8×30	NB35408-030	12		
46	Spring lock washer	Hexagon socket head cap screw M8	ND330-08	12		
48	Retainer for oil seal			1		
49	O-ring	JIS B 2401 G120	PA12-120	1		
50	Oil seal	SA1J 65 85 12	CS05010-200VD	1		
51	Seal cover			1		
52-1	O-ring	JIS B 2401 G120	PA12-120	1		
52-2	O-ring	JIS B 2401 G145	PA12-145	1		
53	Hexagon socket head cap screw	M8×30	NB35408-030	8		
54	Unloader slide valve S			1	—	—
	Unloader slide valve M			—	1	—
	Unloader slide valve L			—	—	1
58	Hexagon socket head cap screw	M8×30	NB35408-030	6		
60	Unloader cylinder			1		
61	Hexagon socket head cap screw	M12×70	NB35412-070	2		
62	Hexagon socket head cap screw	M12×110		6		
63-1	O-ring	JIS W 1516 WG36	PAAS568-258	2		
63-2	O-ring	JIS B2401 P14	PA11-014	2		
64	Unloader piston			1		
65	O-ring	JIS B2401 P130	PA11-130	2		
66	Teflon cap seal	SUNR-BE-130		2		
67	Push rod, unloader slide valve			1		
68	Guide pin	PH01NG 3×8 BK	CS06809-03	1		
69	Locknut	FU nut FU05SS	NG42-05	1		
70	Spacer for unloader piston			1		
73	O-ring	JIS B2401 P32	PA11-032	1		
74	Unloader cover			1		
75-1	O-ring	JIS B2401 G135	PA12-135	1		
75-2	O-ring	JIS B2401 P14	PA11-014	1		
76	Hexagon socket head cap screw	M10×40	NB35410-040	8		
77	Unloader indicator cam S			1	—	—
	Unloader indicator cam M			—	1	—
	Unloader indicator cam L			—	—	1
78	Ball bearing	#6000	CS07800-200	1		
79	Retaining ring	JISB2804 S10	NG12-010	1		
80	Bearing gland			1		
81	Hexagon socket head cap screw	M6×15	NB35406-015	3		
82-1	O-ring	JIS B2401 P10A	PA11-010A	2		
82-2	O-ring	JIS B2401 P16	PA11-016	1		
83	Retainer, O-ring		CS73500-200HE	1		
84	Spacer, unloader cover			1		
91	Shaft key			1		
100	Mechanical seal assembly		CS10002-J170	1		
120	Assembly, unloader indicator		CS12000-200F	1		
128	Hexagon socket set screw	M4×8		1		
137	Dial plate, unloader indicator		CS13700-J170	1		
237-1	Torsional slip washer M		CS23700-160	1		
237-2	Torsional slip washer F		CS23700-125	1		
246	Guide, unloader slide valve			1		
247	Hexagon socket head cap screw	M8×70	NB35408-070	4		

Bowman Refrigeration 206-706-3033

Part No.	Part name	Type	Part code No.	Quantity/unit		
				S	M	L
248	Spring lock washer	Hexagon socket head cap screw M8	ND330-08	4		
249	Parallel pin	8 dia.×60	NE2008-060	2		
250-1	Thrust washer, male rotor		CS25000-160	1		
250-2	Thrust washer, female rotor		CS25000-125	1		
267	Spring lock washer	Hexagon socket head cap screw M8	ND330-08	6		
289	Slide valve S, Vi			1	—	—
	Slide valve M, Vi			—	1	—
	Slide valve L, Vi			—	—	1
292	Push rod S, Vi			1	—	—
	Push rod M, Vi			—	1	—
	Push rod L, Vi			—	—	1
293	Spiral retaining ring	FRSN-45		2		
294	Piston, Vi			1		
295	O-ring	JIS B2401 P52	PA11-052	1		
296	Cylinder, Vi			1		
297	Partition plate, unloader cylinder			1		
298	O-ring	JIS B2401 G135	PA12-135	1		
299-1	O-ring	JIS B2401 G100	PA12-100	1		
299-2	O-ring	JIS W1516 WG36	PAAS568-258	1		
325-1	O-ring	JIS B2401 P32	PA11-032	3		
325-2	Back-up ring for O-ring	SUN-2BP 32		2		
420	Unloader spacer S			1	—	—
	Unloader spacer M			—	1	—
421	O-ring	JIS B2401 P32	PA11-032	2		—
432	O-ring	JIS B2401 G100	PA12-100	4		
433	O-ring	JIS B2401 G75	PA12-075	4		
446	Grooved pin	PY01ND 5×10 BK		1		
451	Push rod gland for unloader slide valve			1		
458-1	Plug	R1/2	NF06-015	1		
458-2	Plug	R1/4	NF06-008	4		
459	Plug	R3/8	NF06-010	1		
481	Check valve slider			1		
485	Spring, check valve	O.D 23, wire diameter 1.8 Free length 95		1		
486	Locknut	FU nut FU04SS		1		
487	Plain washer	JIS B 1256, small dia. M20		1		
488	Sheet stopper			1		
489	Valve sheet		CS48900-J170	1		
490	Valve disc			1		
491	Check valve stem			1		
492	Suction adapter			1		
493	Hexagon socket head cap screw	M20×50	NB35420-050	8		
494	O-ring	JIS B2401 P155	PA11-155	1		
528	Sleeve, oil seal			1		
529	Hexagon socket set screw	M6×8	NA83606-008	2		
535	Hexagon socket head cap screw	M5×70 (For Nichiden)		8		
	Hexagon socket head cap screw	M5×55 (For Danfoss)		8		
536	Spring lock washer	Hexagon socket head cap screw M5		8		
537	Bush, P14 type O-ring			3		
561	O-ring	JISB2401 P12 (For Nichiden)	PA11-012	8		
	O-ring	AS 568A 012 (For Danfoss)		8		
562	Capacity control / variable Vi solenoid valve	SXL5A-4BL (Nichiden)	KK425-1/-2/-3	2		
	Capacity control / variable Vi solenoid valve	EVRB (Danfoss)		2		
591	Parallel pin	10 dia.×55 with female thread		2		
605-A	Plug	R1/2	NF06-015	1		

Bowman Refrigeration 206-706-3033

Part No.	Part name	Type	Part code No.	Quantity/unit		
				S	M	L
605-B	Plug	R1/2	NF06-015		1	
607-A	Plug	R1/8	NF06-004		1	
607-B	Plug	R1/8	NF06-004		1	
611	Sleeve, shower flashing				1	
657	O-ring	JIS B2401 G100	PA12-100		1	
658	Retaining ring	JIS B2804 H100	NG11-100		1	
709	Vi position sensor rod housing				1	
711	Spring	O.D 13, wire diameter 1.6 Free length 100			1	
712	Vi position sensor rod				1	
713	O-ring	JIS B2401 P12	PA11-012		1	
714	O-ring	JIS B2401 P6			1	
715	Plug, Vi position sensor rod				1	
716	Retaining ring	JIS B2804 E snap ring 4	NG13-004		1	
717	O-ring	JIS B2401 G25	PA12-025		1	
718	Gland, Vi position sensor rod housing				1	
719	Hexagon socket head cap screw	M6×25	NB35406-025		4	
720	Vi position sensor support				1	
721	Vi position sensor	Midori Precisions LP-10FB			1	
722	Hexagon socket head cap screw	M3×10			2	
723	Hexagon socket head cap screw	M6×25	NB35406-025		2	
724	Vi position sensor box				1	
725	Packing, Vi position sensor box				1	
726	Hexagon socket head cap screw	M5×15	NB35405-015		4	
727	I plug				1	
728	E plug				1	
729	Spring pin (3 dia.×10)	3 dia.×10	NE3203-010		2	
731-A	Plug	R1/8	NF06-004		1	
731-B	Plug	R1/8	NF06-004		1	
732-A	Plug	R1/8	NF06-004		1	
732-B	Plug	R1/8	NF06-004		1	
732-C	Plug	R1/8	NF06-004		1	
732-D	Plug	R1/8	NF06-004		1	
733-A	Plug	R1/8	NF06-004		1	
733-B	Plug	R1/8	NF06-004		1	
734	Inner cover, balance piston cover				2	
736	Partition plate, suction cover				1	
737	Receptacle	SNW-2003-RM			1	
738	Plug	SNW-2003-PLCF			1	
235-1	Motor spacer	For NEMA 44*D			1	
	Motor spacer	For NEMA 50*D				
	Motor spacer	For IEC FF-500				
	Motor spacer	For IEC FF-600				
235-2	Plate, motor spacer				2	
235-3	Hexagon socket head cap screw	M6×15	NB35406-015		8	
739	Hexagon socket head cap screw	M16×60	NB35416-060		8	
740	Parallel pin	13 dia.×65 with female thread			2	

Note: Part code No. for the O-ring is for the standard material (NBR). For O-rings material other than NBR, the part code No. will differ depending on the material.
For customers using O-rings other than the standard material, contact MAYEKAWA before purchasing the O-ring.

Bowman Refrigeration 206-706-3033

7.2 List of Tightening Torques for Bolts and Nuts

Table 7-2 List of Tightening Torques for 170J

■ Hexagon socket head cap screw

Part No.	Tightening point	Tightening torque N·m (kgf·cm)	Qty.	Remarks
2	Suction cover Bearing head	130(1300)	28	Hexagon socket head cap screw M16×60
18-1	Bearing cover	52(520)	5	Hexagon socket head cap screw M12×50
18-2	Bearing cover	52(520)	13	Hexagon socket head cap screw M12×70
24	Balance piston cover	52(520)	13	Hexagon socket head cap screw M12×50
45	Bearing gland	20(200)	12	Hexagon socket head cap screw M8×30
53	Shaft seal cover	15(150)	8	Hexagon socket head cap screw M8×30
58	Gland, push rod for unloader slide valve	25(250)	6.	Hexagon socket head cap screw M8×30
61	Unloader cylinder	52(520)	2	Hexagon socket head cap screw M12×70
62	Unloader cylinder	52(520)	6	Hexagon socket head cap screw M12×110
76	Unloader cover	30(300)	8	Hexagon socket head cap screw M10×40
81	Bearing gland	10(100)	3	Hexagon socket head cap screw M6×25
247	Slide valve guide	25(250)	4	Hexagon socket head cap screw M8×70
493	Suction adapter	260(2600)	8	Hexagon socket head cap screw M20×50
535	Solenoid valve, capacity control / variable Vi solenoid valve	6(60)	8	Hexagon socket head cap screw M5×70
719	Vi position sensor rod housing gland	10(100)	4	Hexagon socket head cap screw M6×25
722	Vi position sensor	1.2(13)	2	Hexagon socket head cap screw M3×10
723	Vi position sensor support	10(100)	2	Hexagon socket head cap screw M6×25
726	Vi position sensor box	6(60)	4	Hexagon socket head cap screw M5×15

■ Locknut

Part No.	Tightening point	Tightening torque N·m (kgf·cm)	Qty.	Remarks
39-1	Thrust bearing assembly, male rotor	225(2250)	1	Locknut AN12
39-2	Thrust bearing assembly, female rotor	450(4500)	1	Locknut AN09
69	Unloader piston	80(800)	1	FU nut FU05SS
486	Valve disc	60(600)	1	FU nut FU04SS

■ Hexagon socket taper screw plug

Part No.	Tightening point	Tightening torque N·m (kgf·cm)	Qty.	Remarks
10-A	Suction cover	50(500)	1	R3/8
10-B	Suction cover	60(600)	1	R1/2
10-C	Suction cover	60(600)	1	R1/2
10-D	Suction cover	50(500)	1	R3/8
10-E	Suction cover	50(500)	1	R3/8
15-A	Bearing head	25(250)	1	R1/4
15-B	Bearing head	50(500)	1	R3/8
458-1	Main rotor casing	60(600)	1	R1/2
458-2	Main rotor casing	25(250)	1	R1/4
459	Suction cover	50(500)	1	R3/8
605-A	Main rotor casing	60(600)	1	R1/2
605-B	Main rotor casing	60(600)	1	R1/2
607-A	Shaft seal cover	15(150)	1	R1/8

Bowman Refrigeration 206-706-3033

Part No.	Tightening point	Tightening torque N･m (kgf･cm)	Qty.	Remarks
607-B	Shaft seal cover	15(150)	1	R1/8
731-A	Balance piston cover	15(150)	1	R1/8
731-B	Balance piston cover	15(150)	1	R1/8
732-A	Unloader cylinder	15(150)	1	R1/8
732-B	Unloader cylinder	15(150)	1	R1/8
732-C	Unloader cylinder	15(150)	1	R1/8
732-D	Unloader cylinder	15(150)	1	R1/8
733-A	Unloader cover	15(150)	1	R1/8
733-B	Unloader cover	15(150)	1	R1/8

Bowman Refrigeration 206-706-3033

7.3 List of Tools for Disassembly

■ Special Tool

Table7-3 List of Special Tools

Part No.	Tool name	Code No.	Qty.	Remarks
	Locknut wrench (AN09)		1	Size 09, long
	Locknut wrench (AN12)		1	Size 12, long
	Radial bearing installing tool M		1	Radial bearing M
	Radial bearing installing tool F		1	Radial bearing F

■ Standard Tool

Table7-4 List of Standard Tools

Part No.	Tool name	Code No.	Qty.	Remarks
	Ratchet wrench (1/4")		1	
	Screwdriver		1	Screwdriver for slotted-head screws
	Philip's screwdriver		1	Screwdriver for cross recessed head screws
	Eyebolt (M8)		1 set	2 pcs. in 1 set
	Safety bolt (M12)		2	M12×110
	Safety bolt (M12)		2	N12×75
	Retaining ring pliers (medium size)		1	
	Retaining ring pliers (large size)		1	
	Hexagon socket screw keys		1 each	Width across flats 2.5, 3, 4, 5, 6 mm 8, 10, 14, 17 mm
	INHEX socket		1 each	Width across flats 6, 10, 14, 17 mm
	Torque wrench		1	Maximum torque: 100 Nm
	Torque wrench		1	Maximum torque: 300 Nm
	Adjustable angle wrench		1	250 mm
	locknut wrench (AN04)		1	AN04
	locknut wrench (AN05)		1	AN05
	Slide hammer		1 set	Adapter M6, M5

Note: There standard tools mean tools generally sold on the market.

Bowman Refrigeration 206-706-3033

Bowman Refrigeration 206-706-3033

Appendix 1 Tips for Design, Manufacturing, and Installation of the Compressor Package

The 170 J-series screw compressor is delivered as a package in standard. The appendix describes points to be considered when designing or manufacturing the package or installing the compressor package.

Bowman Refrigeration 206-706-3033

Appendix 1.1 Precautions for Design of the Compressor Package

■ Working Limits of the Compressor

Understand and adhere to the instructions in “2.3 Operation Limits” so that the package is designed within the specified operating limits.

The following points are important for the compressor to operate within the operating limits.

- Regulate the supply refrigerant oil pressure within the specifications. (The supply refrigerant oil pressure at the oil header must be lower than the discharge pressure by at least 0.15 MPa) for life time of thrust bearing, sufficient lubrication.
- Ensure appropriate flow rate of the refrigerant oil (appropriate pipe diameter) for lubricating and cooling bearings and seals and discharge gas.

■ Compressor Protection Function

When placing the compressor into a new or an existing system, always use the specified controller (CP4) to control and protect the compressor.

Set the following control values for compressor protection in consideration of the compressor operating limits.

(1) Protection from abnormal high pressure
(2) Protection from abnormal low suction pressure
(3) Protection from low supply oil pressure
(4) Protection from high supply oil temperature
(5) Protection from high discharge temperature
(6) Protection from overcurrent

In addition, install safety valves to pressure vessels such as oil separator, condenser, and evaporator.

■ Operating Control

The specified controller (CP4) for the compressor incorporates the following operational controls that allow the package to operate smoothly and safely.

1) Start-up preparation control

The following controls are performed before the compressor is started up.

- The capacity control slide valve of the compressor is checked to see if it is at the minimum load position.
- The compressor is pre-lubricated before start-up.

2) Operating control

In normal operation state, the following operational controls are performed.

- The compressor capacity is controlled according to the load so that the predetermined temperature or pressure is constant.
- The compressor stops automatically when the operating conditions reach the set points.
- Vi is controlled according to the compressor operating conditions.

3) Control for compressor stop

The following controls are performed before the compressor is stopped.

- The capacity control slide valve of the compressor is set to the minimum position before it is stopped.
  (Alternatively, the compressor is stopped with the capacity control slide valve is in the low load position and the capacity control slide valve is set to the 0% position after it is stopped.)

Bowman Refrigeration 206-706-3033

■ Motor

The 170J-series is intended for a flange motor in standard.

It is applied for the following standards and frames.

- NEMA 44*D, 55*D
- IEC FF-500, FF-600

■ Oil Separator

The oil separator is required to separate and hold compressor lubricant oil, therefore take the following points into consideration during design.

1) Oil separation performance

Design the oil separator so that the quantity of oil carried away from the oil separator is below 10 ppm^{wt} .Consider the gravitational sedimentation method and the types of filter to use.

2) Amount of refrigerant oil held

The amount of refrigerant oil held in the oil separator must at least be more than 1.5 times the supply refrigerant oil flow rate per minute.

3) Attachment of oil level gauge

To manage the refrigerant oil level, an oil level gauges that shows both the upper and lower level limit must be provided.

4) Installation of oil heater

An oil heater must be installed at the bottom of the oil separator with appropriate temperature settings to prevent excessive viscosity increase of refrigerant oil, condensation of refrigerant, and refrigerant dissolving in refrigerant oil at start up.

If the package is for use in cold regions or the refrigerant oil dissolves excessively in the refrigerant, the oil separator must be thermally insulated.

5) Sufficient stiffness

If a horizontal type of oil separator with the compressor and motor mounted on top is adopted, the oil separator must be sufficiently rigidly designed.

CAUTION

- **The oil separator must have sufficient rigid structure so that no misalignment trouble occurs to the compressor and motor during operation due to the oil separator heat stress or deformation due to pressure.**

Bowman Refrigeration 206-706-3033

■ Oil Cooler

The oil cooler must have adequate capacity to sufficiently dissipate heat from the oil.

The oil cooler must be designed with minimum pressure loss.

Some of oil cooler types are: 1. water cooling, 2.Thermosyphon, 3. direct expansion.

CAUTION

- **Large pressure loss may lead to insufficient supply of refrigerant oil. In other cases, lubrication problems may occur inside the compressor due to the vaporized refrigerant gas from the refrigerant oil (refrigerant gas that may have dissolved (or mixed) in the refrigerant oil.)**

Instead of using a shell and tube or plate and frame oil cooler, oil may be cooled by supplying liquid refrigerant to the compressor (liquid injection system). In this case, liquid injection flow rate must be controlled so that the discharge superheat is maintained at an appropriate temperature.

CAUTION

- **Notice that excessive liquid injection may cause the refrigerant oil in the oil separator to foam, resulting in excessive oil carried away from oil separator and insufficient lubrication to the compressor components.**
  In other cases, refrigerant solution in refrigerant oil may reduce the refrigerant oil viscosity.

■ Oil Pipe Installation

The 170J-series requires the following three oil lines: lubrication, oil injection, and unloader/variable Vi system oil lines.

1) Lubrication oil line

For the lubrication system, an inlet port of ANSI #300 1” is provided on the bearing head and another inlet port of Rc1/2 (interchangeable with NPT1/2) is also provided on the suction cover.

Because the 170J-series uses hydrodynamic bearings, it requires pre-lubrication before start-up. Therefore, a pre-lubrication pump must be installed. Note, the supply refrigerant oil line located upstream of the pre-lubrication pump must be installed with a check valve.

2) Oil injection oil line

For oil injection, Rc1/2 inlet port (interchangeable with NPT1/2) is provided on the male rotor side of the main rotor casing and should be used in normal cases. (In some cases when the discharge temperature is higher than limit temperature, the female rotor side injection port may be used at the same time.)

The oil injection line must be installed with a check valve to prevent reversed flow.

3) Oil line for the Unloader, Vi cylinder

To supply oil to the unloader and Vi cylinder, a Rc1/2 port (interchangeable with NPT1/2) is provided on the male rotor side of the unloader cylinder.

The oil supply line for unloader and Vi cylinder must be provided with a small capacity oil pump. The oil pump is used to adjust the position sensors of the unloader slide valve and variable Vi slide valve before test operation.

The Rc1/2 port on the female rotor side is the oil outlet port for the unloader and Vi cylinder. Make sure that the line from this outlet port is connected to the suction line located upstream of the suction flange which is integrated with suction check valve.

Bowman Refrigeration 206-706-3033

■ Oil Pump

A small capacity oil pump must be installed to supply pre-lubrication oil before start-up and to move the unloader slide valve and Vi slide valve when the compressor stops (initial adjustment of the unloader slide valve and Vi slide valve).

For the 170J-series, an oil pump with a capacity from 15 to 20 L/min is recommended.

The oil pump is only required for pre-lubrication before start-up and to move capacity control slide valve and the variable Vi slide valve when the compressor is stopped. When the compressor is in operation, the refrigerant oil to the compressor is supplied by differential pressure (between discharge and suction pressure).

In the case of booster operation conditions where sufficient differential pressure cannot be ensured (if the discharge and suction pressure difference is less than 0.5 MPa), an oil pump must be installed to supply refrigerant oil. (However, if the discharge temperature is within the operating limit, the oil pump is only required for supply to the bearing and seal, and not for the oil injection.)

■ Oil Filter

To eliminate contaminants in the refrigerant oil, an oil filter (main filter) must be installed in the oil line.

The oil filter must have a nominal filtration rating of 15 µm or less ($\beta_{12} \geq 75$).

CAUTION

- **Any contaminants in the refrigerant oil may cause damage to important components such as bearings and shaft seal.**

The oil pump must be installed after the oil filter.

■ Economizer Piping

To install economizer piping, follow the instructions below.

1) When an economizer is used, the E plug (728) must be replaced with a hexagon socket headless tapered pipe plug. (Refer to Sectional View 3/3.)

2) To access the E plug, remove the blind flange for the economizer (ANSI #300 1"). The E plug head is exposed and a tool (socket, size 18) can be fitted to the head of the E plug. Use a wrench to remove the E plug.

3) After removing the E plug, insert a R3/4 hexagon socket headless tapered pipe plug.
The plug must be a metric taper screw plug. (Do not use a NPT plug.)

4) After attaching the R3/4 plug, apply anticorrosive paint to the plug head and the counter bore.
Applying grease additionally is more effective for rust proofing.

5) To connect the pipe for the economizer port, use ANSI #300 1" flanges.

6) While installing the pipes, take sufficient care not to allow any contamination such as spatters to remain in the piping and enter the compressor.

■ Liquid Injection Piping

To install liquid injection piping, follow the instructions below.

1) To install the liquid injection piping, the I plug (727) must be replaced with a hexagon socket headless tapered pipe plug. (Refer to Sectional View 3/3.)

2) To access the I plug, remove the blind flange for the liquid injection (ANSI #300 3/4"). The I plug head is exposed and a tool (socket, size 13) can be fitted to the head of the I plug. Remove the I plug using a wrench.

3) After removing the I plug, insert a R3/8 hexagon socket headless tapered pipe plug.
The plug must be a metric taper screw plug. (Do not use a NPT plug.)

4) After attaching the PT3/8 plug, apply anticorrosive paint to the plug head and the counter bore.
Applying grease will provide more effect for rust proofing.

5) To connect the pipe for the liquid injection port, use ANSI #300 3/4" flanges.

6) While installing the pipes, take sufficient care not to allow any contamination such as spatters to remain in the piping and enter the compressor.

Bowman Refrigeration 206-706-3033

■ Suction Piping

Before connecting the suction pipes, apply grease or liquid gasket (such as HERME SEAL) to the counter bores, bolt heads, holes of the hexagon socket head cap screws (493) fastening the suction adapter (492) to prevent rust and freeze up.

Make sure that the suction check valve located below the compressor suction flange is not subjected to excessive force or damaged during installation of the suction pipe.

CAUTION

- **If no rustproof and freezing-proof coating is applied to the hexagon socket head cap screws fastening the suction adapter, the suction flange and bolts may be damaged.**

■ Miscellaneous

1) Suction/discharge check valve

The 170J-series integrates a suction check valve.

For the discharge side, a separate discharge check valve must be installed at the outlet of the oil separator.

CAUTION

- **When two or more compressors are installed with a single oil separator, check valves must be installed in each discharge pipes between the compressors and the oil separator.**

2) Suction gas strainer

To prevent foreign substances from entering the compressor, a suction gas strainer must be installed in the suction line of the compressor.

The mesh size of suction gas strainer should be 200 µm or less (80 mesh or finer).

Bowman Refrigeration 206-706-3033

Appendix 1.2 Tips for Compressor Package Manufacturing

■ Piping arrangements, Vessel

Any foreign substances in the refrigerant oil will affect lubrication of the compressor bearings and mechanical seal, resulting in compressor failures. To prevent such problems, components such as oil separators, oil coolers, oil filters and suction gas strainers must be cleaned to remove all foreign substances. The main pipes must be cleaned by shot blast or pickling before installation.
In particular, the lubricant piping from the oil filter to the compressor port and the suction piping after the suction gas strainer to the compressor suction must be thoroughly cleaned.

Bowman Refrigeration 206-706-3033

Appendix 1.3 Tips for Compressor Package Installation

■ Installation of Compressor and Motor to the package

For coupling the compressor with the flange motor and fastening them to the compressor base, follow the instructions below.

1. Remove any adhesive matters such as paint from the motor spacer side flange face of the compressor bearing cover using a scraper and brass wire brush, and clean the face with a solvent (such as kerosine). Check the flange face for damage. Rectify any scratches and damage.
2. Clean the compressor side flange face of the motor spacer using a solvent.
3. Place the compressor on a working table. Make sure to prepare sleepers with a height of 100 mm or more to use as the compressor base because the motor side flange diameter is bigger than the compressor side flange diameter.
4. Attach two safety bolts (M16×60) to the upper two bolt holes on the flange face of the bearing cover motor spacer side.
5. Lift the motor spacer with lifting equipment such as a crane and move it horizontally to align with the compressor side flange face of the compressor bearing cover flange face using the safety bolts on the bearing cover as the guides.
6. From the motor spacer side, insert two hexagon socket head cap screws (M16×20) at diagonal positions and lightly tighten them by wrench evenly so that no gap is present between the flange faces.
7. Apply lubricant (for example, molybdenum disulfide) to the parallel pin (13 dia. × 60) and insert it by knocking with a copper hammer from the motor spacer side.
8. Remove the safety bolts and insert the remaining bolts from the motor spacer side, then tighten all bolts to the specified torque in a star pattern.
9. Lift the compressor with motor spacer using lifting equipment such as a crane hooking on the three eyebolts on the compressor, place it on the compressor base of the package, and fix the motor spacer and compressor feet to the compressor base with bolts.
10. Lift the motor using lifting equipment such as a crane, put the spigot of the motor in the recess of motor spacer, and fit the motor flange face and the motor spacer flange face.
11. Insert two bolts at the diagonal positions from the motor side, and tighten them evenly so that no gap is present between the flange faces.
12. Insert the remaining bolts and tighten all bolts to the specified torque.
13. Remove the crane and finally tighten the two bolts on the counter-load side motor feet.
14. If there is any gap between the motor feet and the motor base, adjust the height by inserting shims before tightening the bolts.

With these steps, the coupling of flange motor and compressor and fastening them to the compressor base is finished.

CAUTION

- **If there is any gap left between the base and the motor feet, the compressor and motor frame can be strained, which may lead not only to abnormal noises and vibrations but also damage to the bearing or leak from the mechanical seal.**

When the compressor and the motor are coupled without a motor spacer, the four feet of the compressor and motor must be firmly fastened to the compressor and motor bases.

In this case, the couplings of the motor and the compressor must be aligned. (For detailed procedure, refer to the package instruction manual.)

Bowman Refrigeration 206-706-3033

■ Suction Gas Line Piping

When installing the suction piping to the compressor package, provide pipe supports at appropriate positions so that the compressor suction flange is not subject to excessive loads.

CAUTION
● **Any excessive loads to the compressor from the piping may cause compressor casing deformation, resulting in mechanical problems.**

■ Foundation for Compressor Package

The compressor package must be mounted on a solid floor or foundation. The package must be firmly fixed to the foundation with anchor bolts after leveling and aligning.

CAUTION
● **If the package is mounted on a floor or foundation without sufficient reinforcement, abnormal vibrations may occur from the compressor and/or the package.**

Bowman Refrigeration 206-706-3033

Bowman Refrigeration 206-706-3033